E – Notes

EDC

Ch 1 MULTISTAGE AMPLIFIERS

NEED FOR MULTISTAGE AMPLIFIER:- In communication, it is not possible to receive the transmitted signal at the receiver with same strength. Infect the signal receive at the receiver is very weak and hence amplification is required.

Sometimes a single amplifier is not sufficient to produce desired results, so need of multistage amplifier arises.

1. The basic purpose of multi-stage amplifier is to raise strength of (millivolt/microvolt)
2. Weak signal to several volts signal. The gain of single stage amplifier is not sufficient, thereby two or more stages of amplifier are used to amplify the weak signal. In multistage amplifier, any desirable gain can be obtained by selecting gain of each stage of amplifier. The overall gain is the product of gain of each stage.

The common emitter configuration is more widely used in multistage amplifiers because its gain is greater than unity. It is widely used in radio receivers/television recovers, intermediate frequency stage. The intermediate frequency (I.F) stage is used to increase the strength of weak signal. The two or three stage transformer coupled amplifier helps in increasing the overall gain of the receiver.

GAIN OF MULTISTAGE AMPLIFIER:- A multistage amplifier can be represented by block diagram as shown in fig. 1.2.

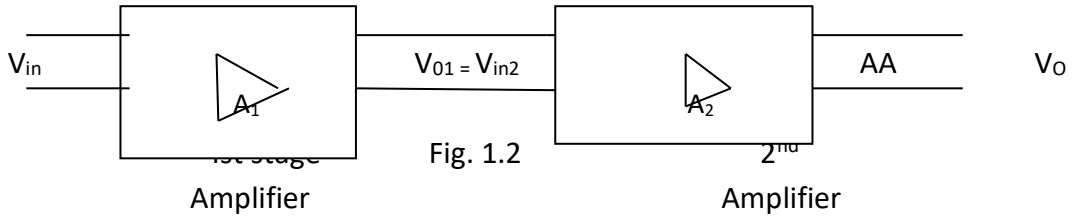

Fig. 1.2

It may be noted that the output of first stage is the input of second. The voltage gain is the extent or limit to which voltage level of weak signal will be raised. Hence, voltage gain is defined as ratio of output voltage to input voltage.

$$\text{Voltage gain. (A)} = \frac{\text{output voltage}}{\text{Input voltage}}$$

The signal voltage V_{in} is applied to the input of first stage. The final output V_O is available at the out put terminal . The output is first stage (or input to the second stage) is

$$V_{OI} = A_1 V_{in}$$

Where A_1 is the voltage gain of first stage.

The input of second stage is $V_{in2} = V_{01}$

The output of second stage is $V_{o2} = A_2 V_{in2}$

$$V_{o2} = V_{output} (V_O) = A_2 V_{in2}$$

$$V_o A_2 V_{o1} \text{ [Substituting value of } V_{in2} \text{ from equation 2]}$$

$$V_O = A_2 A_1 V_{in} \text{ [Value of } V_{o1} \text{ from equation 1]}$$

Therefore, voltage gain, $G = \frac{V_o}{V_{in}} = A_1 A_2$

Voltage gain of multi-stage amplifier will be equal to product of voltage gains of each stage. The gain of an amplifier can also be expressed in another unit called decibel. If gain is A_1 dB and A_2dB, then overall gain in decibel will be:

$$(G)dB = (A_1)_{dB} + (A_2)_{dB}$$

In practical, the overall gain of multistage amplifier is always less than product of individual amplifier gains. This is because of the loading effect of 2nd stage (last stage).

RC Coupled Amplifier

A **Resistance Capacitance (RC) Coupled Amplifier** is basically a multi-stage amplifier circuit extensively used in electronic circuits. Here the individual stages of the amplifier are connected together using a resistor-capacitor combination due to which it bears its name as RC Coupled. Figure 1 shows such a two-stage amplifier whose individual stages are nothing but the common emitter amplifiers. Hence the design of individual stages of the **RC coupled amplifiers** is similar to that in the case of common emitter amplifiers in which the resistors R_1 and R_2 form the biasing network while the emitter resistor RE form the stabilization network. Here the C_E is also called bypass capacitor which passes only AC while restricting DC, which causes only DC voltage to drop across R_E while the entire AC voltage will be coupled to the next stage.

Further, the coupling capacitor C_C also increases the stability of the network as it blocks the DC while offers a low resistance path to the AC signals, thereby preventing the DC bias conditions of one stage affecting the other. In addition, in this circuit, the voltage drop across the collector-emitter terminal is chosen to be 50% of the supply voltage V_{CC} inorder to ensure appropriate biasing point.

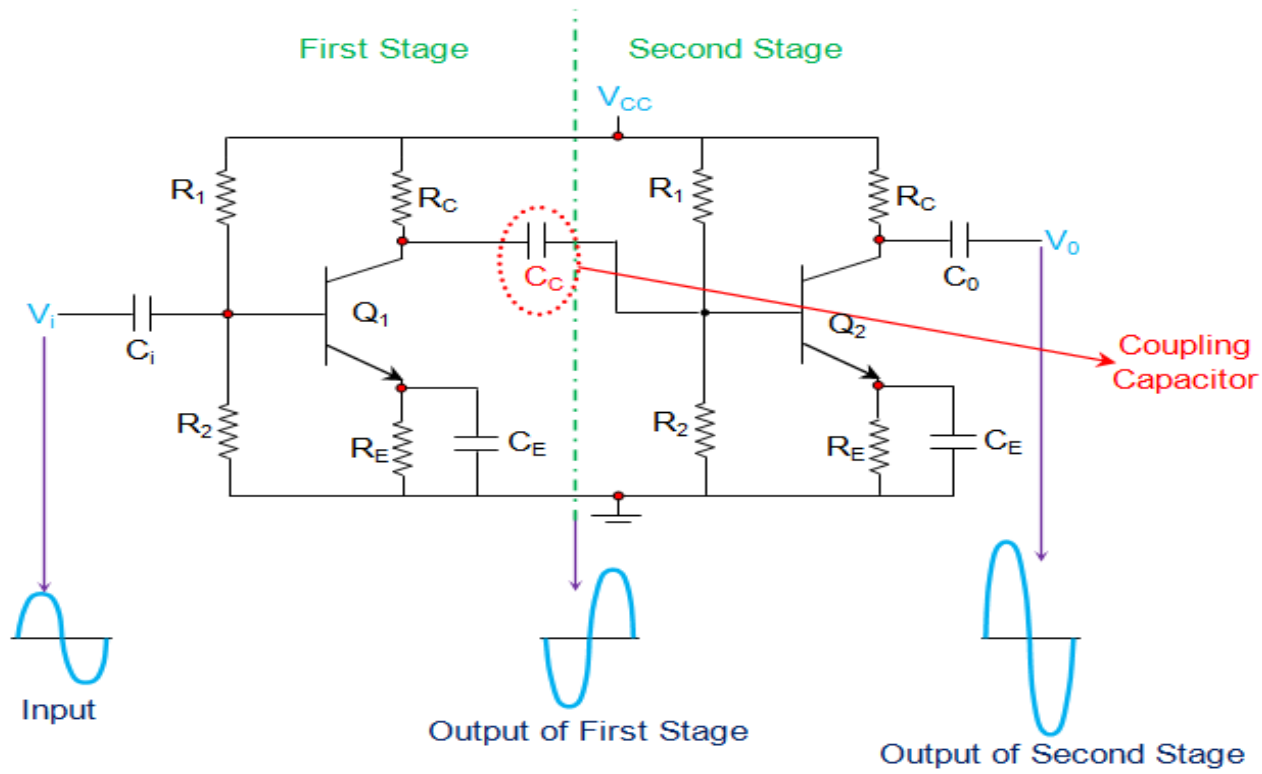

Figure 1 Two-Stage RC Coupled Amplifier

Related pages

Amplifier Gain | Decibel or dB Gain

Differential Amplifier

RC Coupled Amplifier

Common Emitter Amplifier

In this kind of amplifier, the input signal applied at the base of the transistor in stage 1 (Q_1) is amplified and appears at its collector terminal with a phase-shift of 180°. The AC component of this signal is coupled to the second stage of the **RC coupled amplifier** through the coupling capacitor C_C and thus appears as an input at the base of the second transistor Q_2. This is further amplified and is passed-on as an output of the second stage and is available at the collector terminal of Q_2 after being shift by 180° in its phase. This means that the output of the second stage will be 360° out-of-phase with respect to the input, which inturn indicates that the phase of the input signal and the phase of the output signal obtained at stage II will be identical.

Further it is to be noted that the cascading of individual amplifier stages increases the gain of the overall circuit as the net gain will be the product of the gain offered by the individual stages. However in real scenario, the net gain will be slightly less than this, due to the loading effect. In addition, it is important to note that by following the pattern exhibited by Figure 1, one can cascade any number of common emitter amplifiers but by keeping in mind that when the number of stages are even, the output will be in-phase with the input while if the number of stages are odd, then the output and the input will be out-of-phase.

The frequency response of a **RC coupled amplifier** (a curve of amplifier's gain v/s frequency), shown by Figure 2, indicates that the gain of the amplifier is constant over a wide range of mid-frequencies while it decreases considerably both at low and high frequencies. This is because, at low frequencies, the reactance of coupling capacitor C_C is high which causes a small part of the signal to couple from one stage to the other. Moreover for the same case, even the reactance of the emitter capacitor C_E will be high due to which it fails to shunt the emitter resistor R_E effectively which inturn reduces the voltage gain.

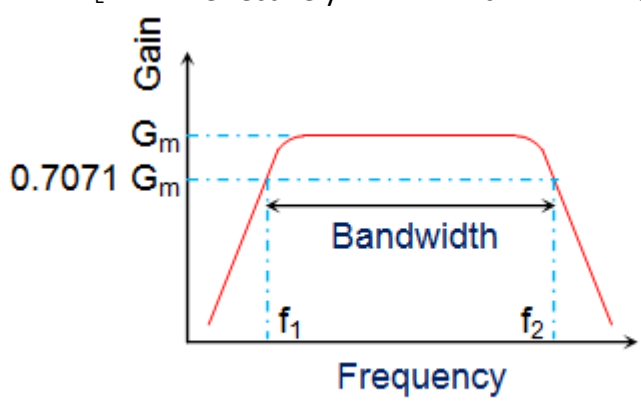

Figure 2 Frequency Response Curve of a RC Coupled Amplifier

On the other hand, at high frequencies, the reactance of C_C will be low which causes it to behave like a short circuit. This results in an increase in the loading effect of the next stage and thus reduces the voltage gain. In addition to this, for this case, the

capacitive reactance of the base-emitter junction will be low. This results in a reduced voltage gain as it causes the base current to increase which inturn decreases the current amplification factor β. However, in mid-frequency range, as the frequency increases, the reactance of C_C goes on decreasing which would lead to the increase in gain if not compensated by the fact that the reduction in reactance leads to an increase in the loading effect. Due to this reason, the gain of the amplifier remains uniform/constant throughout the mid-frequency band.

Advantages of RC Coupled Amplifier

1. Cheap, economical and compact as it uses only resistors and capacitors.
2. Offers a constant gain over a wide frequency band.

Disadvantages of RC Coupled Amplifier

1. Unsuitable for low-frequency amplification.
2. Low voltage and power gain as the effective load resistance (and hence the gain) is reduced due to the fact that the input of each stage presents a low resistance to its next stage.
3. Moisture-sensitive, making them noisy as time elapses.
4. Poor impedance matching as it has the output impedance several times larger than the device at its end-terminal (for example, a speaker in the case of a public address system).
5. Narrow bandwidth when compared to JFET amplifier.

Applications of RC Coupled Amplifier

1. RF Communications.
2. Optical Fiber Communications.
3. Public address systems as pre-amplifiers.
4. Controllers.
5. Radio or TV Receivers as small signal amplifiers.

Explain Working of RC Coupled Amplifier

RC Coupled Amplifier

Due to its low cost and excellent audio fidelity over a wide range of frequencies, an RC Coupled Amplifier is the most popular type of coupling used in a multi stage amplifier.

It is usually used for voltage amplification.

The figure below shows two stages of an RC coupled amplifier.

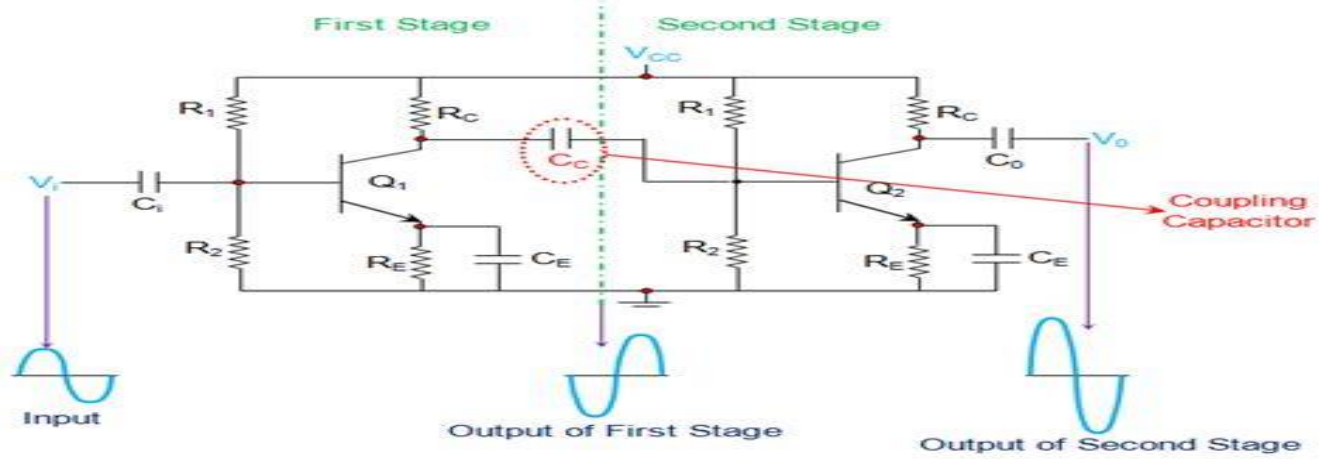

Figure 1 Two-Stage RC Coupled Amplifier

As you can see in the fig above, a coupling capacitor C_C is used to connect the output of first stage to the base i.e. input of the second stage and this continues when more stages are connected.
Since here the coupling from one stage to next is achieved by a coupling capacitor followed by a connection to a shunt resistor, therefore, such amplifiers are known as resistance-capacitance coupled amplifier or simply RC coupled amplifier.
The resistances R_1, R_2 and R_E form the biasing and stabilisation network.
The emitter bypass capacitor offers a low resistance path to the signal. Without this capacitor the voltage gain of each stage would be lost.
The coupling capacitor C_C transmits a.c. signal but blocks d.c. This prevents d.c. interference between various stages and the shifting of operating point.

Working of RC Coupled Amplifier

When a.c. signal is applied to the base of the first transistor, it is amplified and appears across its collector load R_C.
Now the amplified signal developed across R_C is given to the base of the next transistor through a coupling capacitor C_C .
The second stage again amplifies this signal and the more amplified signal appears across the second stage collector resistance.
In this way the cascaded stages amplify the signal and the overall gain is considerably increased.
However, the total gain is less than the product of the gains of individual stages. It is because, when a second stage follows the first stage, the effective load resistance of first stage is reduced due to the shunting effect of the input resistance of second stage. This reduces the gain of the stage which is loaded by the next stage.
To explain it better, let us take an example of 3-stage amplifier. The gain of first and second stage will be reduced due to loading effect of the next stage. But the gain of the third stage which has no loading effect due to subsequent stage, remains unchanged.
The overall gain is equal to the product of the gains of three stages.

Frequency Response of RC Coupled Amplifier

The figure below shows the frequency response of a typical RC coupled amplifier.

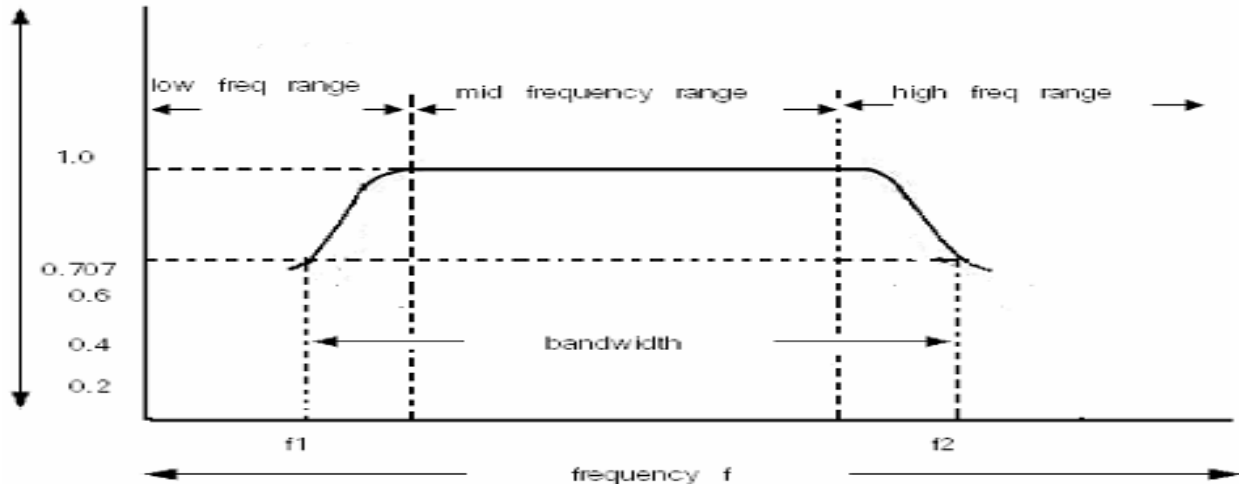

Frequency response or RC coupled Amplifier

You can notice from the above fig. that the voltage gain drops off at low (< 50 Hz) and high (> 20 KHz) frequencies. However, it is uniform over the mid-frequency range i.e. 50 Hz to 20 KHz.
This behaviour of the amplifier can be explained as follows :

(i) At Low Frequencies

At low frequencies i.e. below 50 Hz, the reactance of coupling capacitor C_C is quite high and hence very small part of the signal will pass from one stage to the next stage.

Again C_E can not shunt the emitter resistance R_E effectively because of its large reactance at low frequencies.

These two factors cause the dropping of voltage gain at low frequencies.

(ii) At High Frequencies

At high frequencies i.e. above 20 KHz, the reactance of coupling capacitor C_C is quite small and hence it behaves as a short circuit. This increases the loading effect of next stage and results in decreased voltage gain.

Again at high frequencies, capacitive reactance of base-emitter junction is low which in result increases the base current. This causes decrease in current amplification factor β.

These two factors cause the dropping of voltage gain at high frequencies.

(iii) At Mid Frequencies

At mid frequencies i.e. between 50 Hz to 20 KHz , the voltage gain of teh ampifier is constant.

The effect of coupling capacitor in this frequency range is such that the voltage gain remains uniform.

As the frequency increases in this range, reactance of C_C decreases which in result increases the gain. However, at the same time lower reactance means higher loading effect of first stage to the next one and hence gain decreases.

Thus, these two factor almost cancel each other, resulting in an uniform gain at this mid frequency.

Advantages of RC Coupled Amplifier

1. It has a great frequency response. The gain is uniform over the audio frequency range which is important for speech, music etc.
2. It employs only resistors and capacitors which are cheap, hence, it has low cost.
3. The circuit is very compact due to the small size and light weight of resistors and capacitors.

Disadvantages of RC Coupled Amplifier

1. The RC coupled amplifiers have low voltage and power gain. Because, the low resistances presented by the input of each stage to the subsequent stage decreases the effective load resistance and hence decreases the gain.
2. These amplifiers become noisy with age, particularly due to moist.
3. Impedance matching is poor because the output impedance of RC coupled amplifieris several hundred ohms whereas the input impedance of a speaker is only few ohms.

Application of RC Coupled Amplifier

Used as voltage amplifiers for example in the initial stages of public address system.

If other type of coupling such as transformer coupling is used in the initial stages, this results in frequency distortion which may be amplified in the next stage.

But, due to its poor impedance matching, it is rarely used in the final stages.

Explain the Working of Transformer Coupled Transistor Amplifier with Circuit Diagram

Transformer Coupled Transistor Amplifier

As we have already discussed in our previous tutorial, in case of a RC coupled transistor amplifier the voltage and power gain are low since, the effective load resistance of each stage is decreased due to the low resistance presented by the input of each stage to the next stage.

If the effective load resistance of each stage could be increased, the voltage and power gain could also be increased.

This can be achieved by transformer coupling. By using the impedance matching properties of transformer, the low resistance of one stage or load can be reflected as a high load resistance to the previous stage.

Transformer coupling is normally used when the load is small. It is mostly used for power amplification.

Working of Transformer Coupled Transistor Amplifier

The figure below shows the circuit of a two stage transformer coupled amplifier.

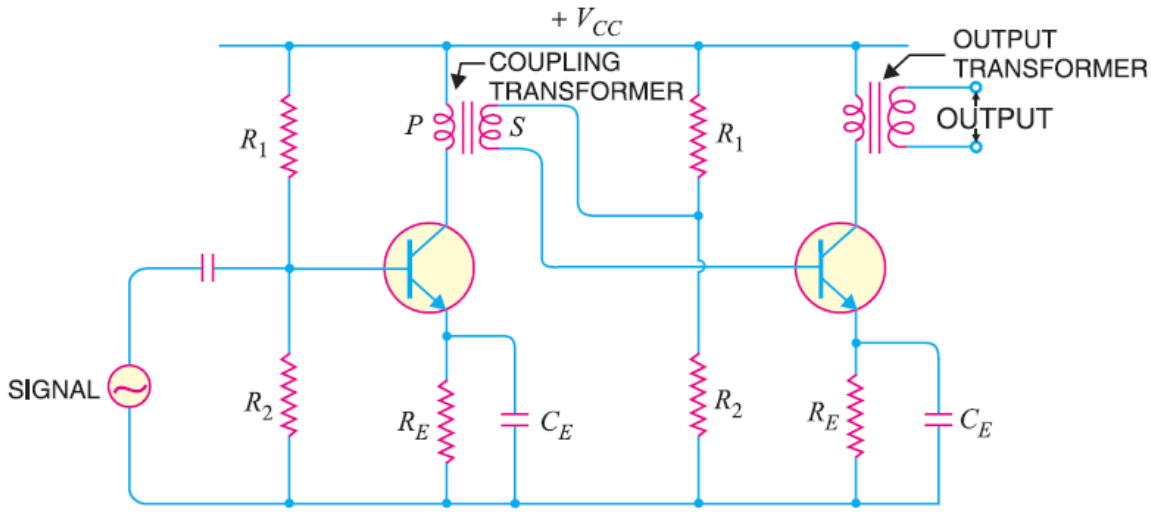

As you can see from the above fig. a coupling transformer is used to feed the output of one stage to the input of the next stage.

The primary P of this transformer is made the collector load and its secondary S supplies input to the next stage.

When an a.c. signal is applied to the base of first transistor, it appears in the amplified form across the primary P of the coupling transformer.

Now the voltage developed across P is transferred to the input of the next stage by the transformer secondary S.

The second stage now performs the amplification in an exactly same manner.

Frequency Response of Transformer Coupled Transistor Amplifier

The frequency response of a transformer coupled amplifier is shown in the figure below.

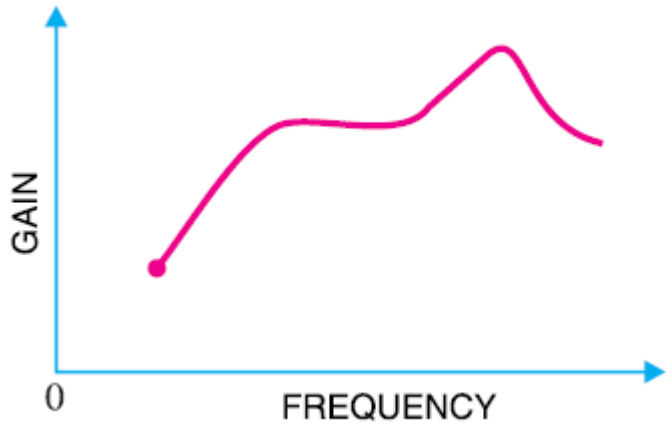

It is clear from the above fig. that its frequency response is poor than the RC coupled amplifier.

The gain is constant only over a small range of frequency.

Since, the output voltage is equal to the collector current multiplied by reactance of primary, hence at low frequencies, as the reactance of primary begins to fall , the output voltage also decrease and hence the gain.

At high frequencies, the capacitance between turns of windings acts as a bypass condenser to reduce the output voltage and hence the gain.

Due to these two factors, there will be disproportionate amplification of frequencies in a complete signal such as music, speech etc.

Hence, transformer coupled amplifier introduces frequency distortion.

Advantages of Transformer Coupled Transistor Amplifier

1. There is no loss of signal power in the collector or base resistors.

2. An excellent impedance matching can be achieved in a transformer coupled amplifier.
3. Due to excellent impedance matching, transformer coupling provides higher gain. A properly designed single stage transformer coupling can provide the gain of two stages of RC coupling.

Disadvantages of Transformer Coupled Transistor Amplifier

1. It has a poor frequency response.
2. The coupling transformers are bulky and expensive at audio frequencies.
3. Frequency distortion is higher i.e. low frequency signals are less amplified as compared to the high frequency signals.
4. Transformer coupling introduces hum in the output.

Application of Transformer Coupled Transistor Amplifier

It is mostly used for impedance matching.

Normally the last stage of a multi stage amplifier is the power stage. Here it is required to transfer maximum power to the output device for example a loud speaker.

Usually the impedance of an output device is few ohms whereas the output impedance of the transistor is several hundred ohms.

In order to match the impedance, a step down transformer of proper turn ratio is used. The impedance of secondary of the transformer is made equal to the load impedance and primary impedance equal to the output impedance of the transistor.

Thus the load on the primary side is comparable to the output impedance of the transistor and this results in maximum power transfer from the transistor to the primary of transformer.

Direct Coupled Transistor Amplifier with Circuit Diagram

Direct Coupled Transistor Amplifier

There are many applications in which extremely low frequency signals i.e. below 10 Hz are to be amplified, for example, amplifying photo-electric current, thermo-couple current etc.

In such applications, use of coupling devices such as capacitors and transformers makes such amplifiers bulky due to the large electrical size of these components at low frequencies.

Hence, in such cases, one stage is directly connected to the next stage without any intervening coupling device. This type of coupling is known as direct coupling.

Working of Direct Coupled Transistor Amplifier

The figure below shows the circuit of a three-stage direct coupled amplifier.

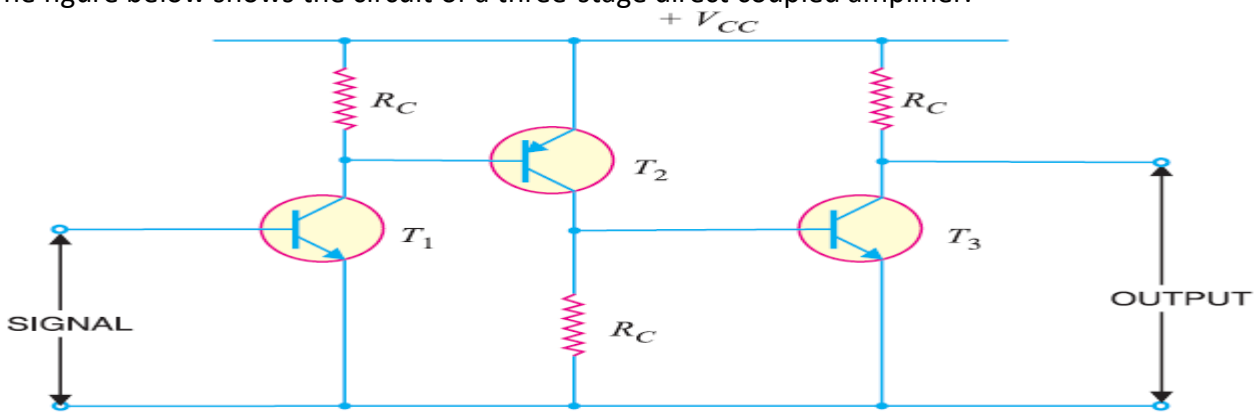

As you can see from the above fig. this circuit uses complementary transistors, which makes the circuit stable with respect to temperature changes.

The first stage uses npn transistor, the second stage uses pnp transistor and so on.

The output from the collector of first transistor T_1 is fed to the second transistor T_2 and so on.

The weak signal is applied to the input of first transistor T_1. Due to transistor action, an amplified output is obtained across the collector load R_C of T_1.
Now this voltage drives the base of the second transistor T_2 and produce amplified output at its collector load.
In this way, direct coupled amplifier raises the strength of weak signal.

Advantages of Direct Coupled Transistor Amplifier

1. Circuit is simple because of minimum use of resistors.
2. Cost is low because of the absence of expensive coupling devices.

Disadvantages of Direct Coupled Transistor Amplifier

1. This amplifier can not be used for amplifying high frequency signals.
2. The operating point is shifted due to temperature variations.

Ch. 2 LARGE SIGNAL AMPLIFIER

DIFFERENCE BETWEEN VOLTAGE AND POWER AMPLIFIERS:- The primary function voltage amplifier is to raise the voltage level of the signal. It is designed to achieve the largest possible voltage gain. The voltage amplifiers are small signal amplifiers.

The main objective of power amplifier is to raise the power level of the signal n electronic apparatus. It helps in boosting the power level of input signal. The power amplifiers are also know as large signal amplifier.

The main features, which differ voltage amplifier from power amplifier, are given below:

Voltage Amplifier	Power Amplifier
1. The main purpose of voltage amplifier is to raise voltage level of weak signal.	The main purpose of power amplifier is to raise power level of weak signal.
2. The magnitude of current/voltage is small hence heat dissipation in collector junction of transistor will be small. Thereby no need of heat sink is there in voltage amplifier.	The magnitude of current and voltage is large and cover considerable part of dc load line. Thereby heat dissipation is high, hence to avoid overheating of transistors, heat sinks are used.
3. As operation of amplifying device transistor is limited to linear portion of current/voltage characteristics thereby distortion in output will be minimum.	As operation of amplifying device cover non linear region of characteristics, thereby distortion will be present in output
4. In this type of amplifier, size of transistor is small.	In power amplifier, as magnitude of current flow is large. Therefore to overcome thermal runaway, collector region is kept wide. The surface are of this region is increased so that heat dissipate into air or in most of cases metal caps are used to extract heat from junction. That is why, size of power transistor is large as compared to transistors in voltage amplifier.
5. In analysis of voltage amplifier, main parameter under consideration is gain.	

6. In voltage amplifier, RC coupling is widely used to couple energy to next stage.	In this type of amplifier, as power is to be raised, the milliwatt signal is to be converted to several watt signal. The dc energy is to be converted into ac. Therefore, collector efficiency is considered as performance parameter. In power amplifier, the objective is not only to raise power but also to couple power to low impedance load. Therefore for impedance matching, transformer coupling is widely used.

The comparison between voltage and power amplifier is given below in the tabular form:

S.No.	Particular	Voltage amplifier	Power amplifier
1	B	High (> 100)	Low (20 to 50)
2	R_C	High (4-10 kΩ)	Low (5 to 20 Ω)
3	Coupling	Usually R – c coupling	Invariably transformer coupling
4	Input voltage	Low (a few mV)	High (2-4 V)
5	Collector current	Low (~ 12mA)	High (. 100mA)
6	Power output	Low	High
7	Output impedance	High (~ 12kΩ)	Low (200 Ω)

IMPEDANCE MATCHING IN AMPLIFIERS:- In power amplifiers, load is of low impedance. Because power amplifiers are widely used in audio/video system where load is speaker of low impedance, the purpose of power amplifier is not only to raise power level of signal but also to transfer maximum power to load at output end. As output impedance of amplifier is in few kΩ and load is of few ohm therefore due to impedance due to impedance mismatch, maximum power transfer is not possible.

For impedance matching, most of power amplifiers use to deliver power to load are transformer coupled. As shown in fig transformer is placed instead of collector resistance in an amplifier circuit. The secondary terminal is connected to load. The impedance matching can be obtained by proper selection of number of turn on primary and secondary of transformer winding.

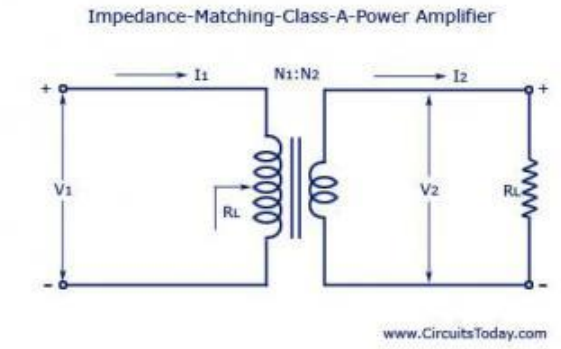

fig

HOW TRANSFORMER COUPLING CAUSE IMPEDANCE MATCHING:- When V_{in} voltage is more than threshold voltage, transistor will turn ON. The voltage across collector will be;

$V_c = o\ v$

i.e. $V_{c\ min}\ o\ v$

when input voltage is less than threshold limit, then transistor will be OFF thereby collector voltage will be;

$V_{c\ max} = 2V_{cc}$

This voltage is twice the supply voltage because of presence of inductor in circuit. When transistor in ON, collector current flows through inductor thus increasing magnetic field in the coil. Thereby voltage in primary coil will be V_{cc} this is illustrated in fig

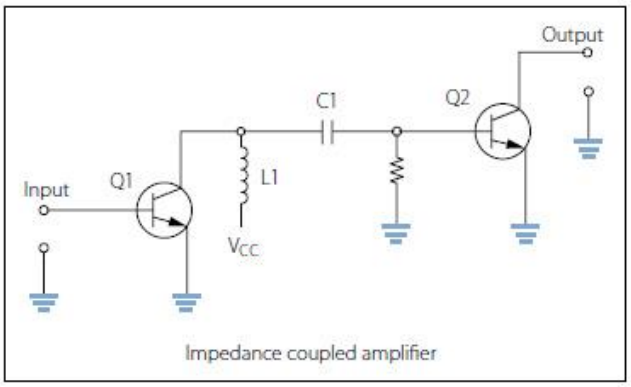

Figure 10-229. Simplified impedance coupling circuit.

When transistor is OFF, collector current reduces to zero. This cause magnetic field in coil to decrease. As the field is decreasing. The polarity of voltage induced in coil will reverse.

Thereby voltage $V_P = -V_{CC}$

Therefore, when transistor is cut off,

$$V_{C\ max} = V_{CC} - V_P = V_{CC} - (-V_{CC}) = 2V_{CC}$$

Thereby maximum swing in collector voltage is given as;

$$V_{CPP} = 2\ V_{CC}$$

To achieve maximum swing, bias voltage should be;

$$V_{bias} = \frac{1}{2} V_{CPP} = V_{CC}$$

The maximum swing in primary voltage, V_P is equal to $2V_{CC}$. The voltage across secondary is given by the relation:

$$V_C = \frac{1}{2} V_P$$

Where, K is turn ratio of transformer.

Then, load peak to peak voltage will be:

$$V_{LPP} = \frac{1}{n} V_P = \frac{2}{n} V_{CC}$$

load current will be:

$$I_L = \frac{V_L}{R_L}$$

Peak to peak load current will be:

$$I_{LPP} = \frac{2V_{CC}}{KR_L}$$

The primary current/collector current is equal to

$$I_C = \frac{1}{K} I_L$$

And peak to peak current is; $I_{CPP} = \frac{2V_{CC}}{K^2R_L}$

Thereby effective resistance in collector circuit is;

$$R_{effective} = \frac{V_{CPP}}{I_{CPP}} = K^2 R_L$$

Thereby if output impedance is in kilo ohm and load impedance is in few ohm, then by selecting turn ration, the effective impedance can be matched with output impedance of amplifier. This is called impedance matching.

Example 2.1. let in transformer coupled amplifier if output resistance of amplifier is I kΩ and load (speaker) resistance is 10 Ω. What should be turn ratio of transformer for proper impedance matching.

Solution: load resistance, R_L= 10Ω

Output resistance, R_C = 1kΩ

When load is connected at secondary winding to transformer, then impedance seen at load from primary winding is equal to

$$R'L = K^2R_L$$

Where K is turn ratio.

For impedance matching, $R'_L = R_C$

Or $1000 = K^2 \times 10$

Or $K^2 = 100$

i.e. $K = 10$

CLASS A Amplifier :- In class A operation, the Q-point is set in the middle of active region so that the transistor operators in the active region throughout the full a.c. cycle i.e. the collector current flows for entire a.c. cycle. To get the class A operation, the BE junction of the transistor is forward biased and BC junction is reverse biased as shown in fig (a) so that the Q-point lies in the centre of active region of transistor output characteristics.

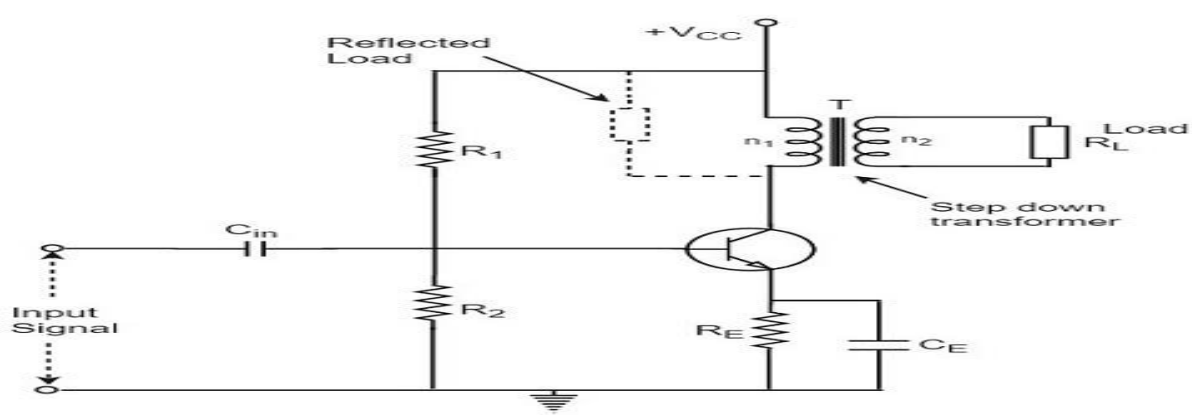

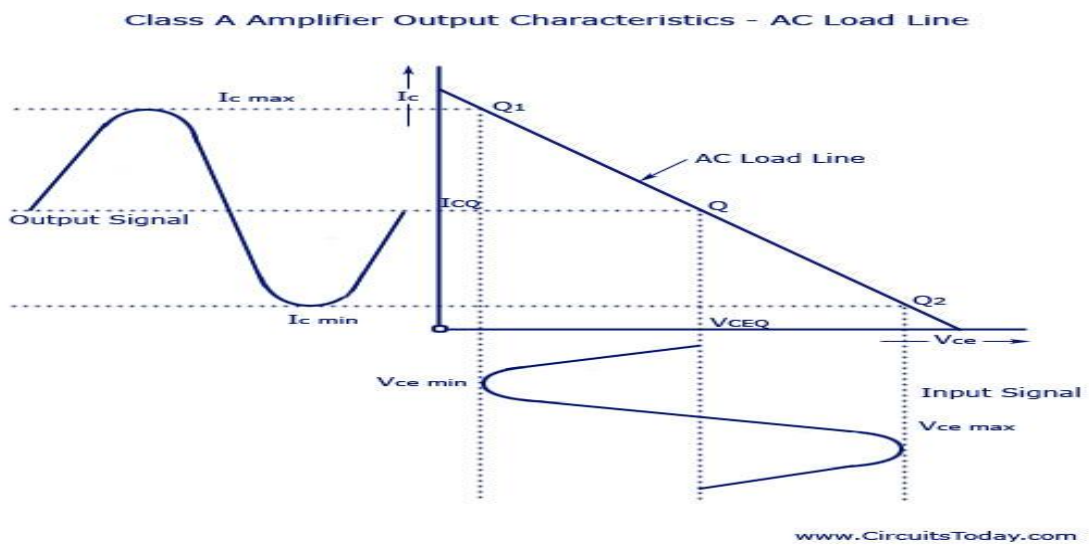

Fig. biasing arrangement and output waves for class A operation

In the operation, the output wave shape is exactly similar to the input wave shape. Such amplifiers have least distortion but their efficiency is low because sufficient current flow through them even in quiescent condition i.e. when there is no signal current.

CLASS B Amplifier:- In class B operation, the collector current flows only for one half of a.c. input signal cycle. To get the class B operation, the Q-point of the circuit is fixed at the cut-off point of the characteristics. In class B operation one half of the output signal cycle is cut-off. Therefore, a severe distortion occurs. However these amplifiers provide higher efficiency than class A because here the quiescent current is zero. No power is dissipated when the signal is not flowing fig. shows the biasing arrangement for class B operation.

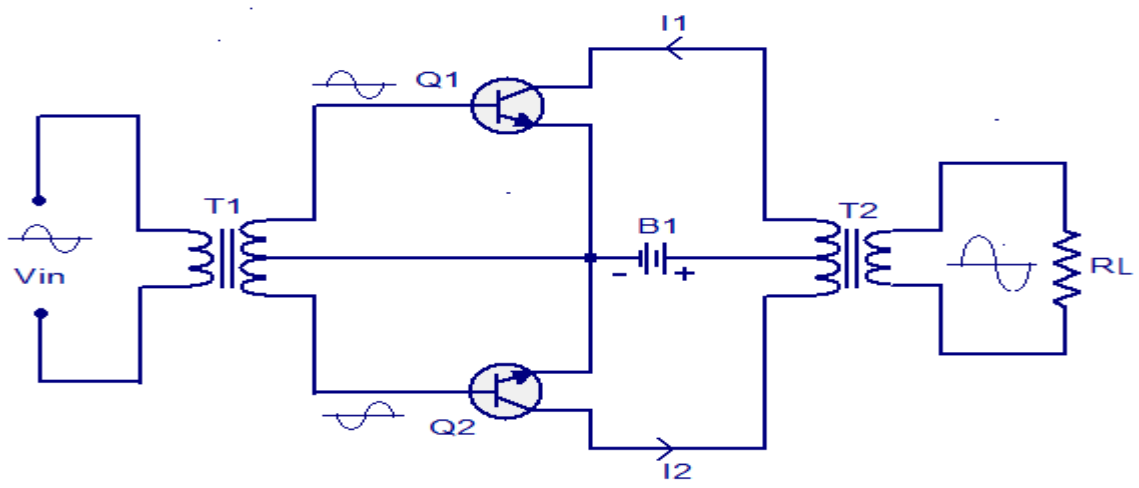

Class B push pull amplifier

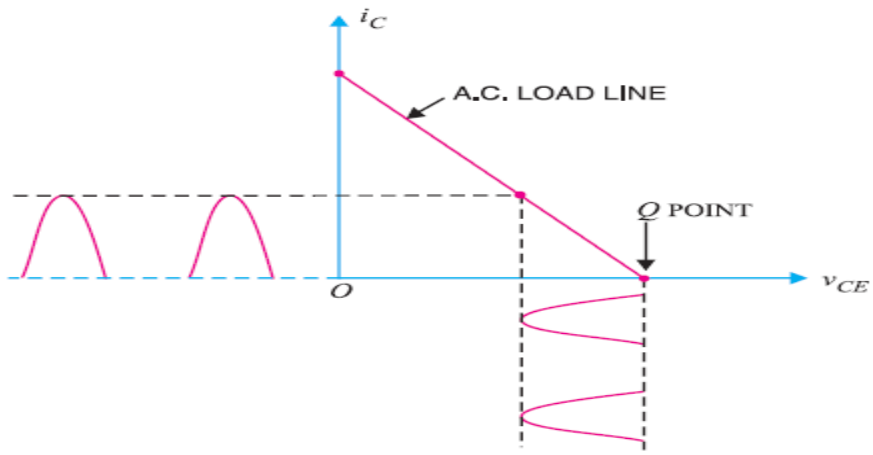

Fig. Biasing arrangement and output waves for class B operation

Here it may be asked as to what is the utility of such amplifier in which half cycle of signal wave is cut-off. Actually such amplifier is never used with one transistor. Instead, two transistors are used working in 108° phase opposition. One transistor amplifies one half of the signal and the second transistor amplifies the next halt. This is push-pull operation and will be taken up in details later on in this unit.

CLASS AB Amplifier :- This operation is between class A and B. in this operation, the collector current flows for one complete half and some part of the second half signal cycle. The Q-point is set just above the cut-off region. Fig shows the biasing arrangement for class AB operation.

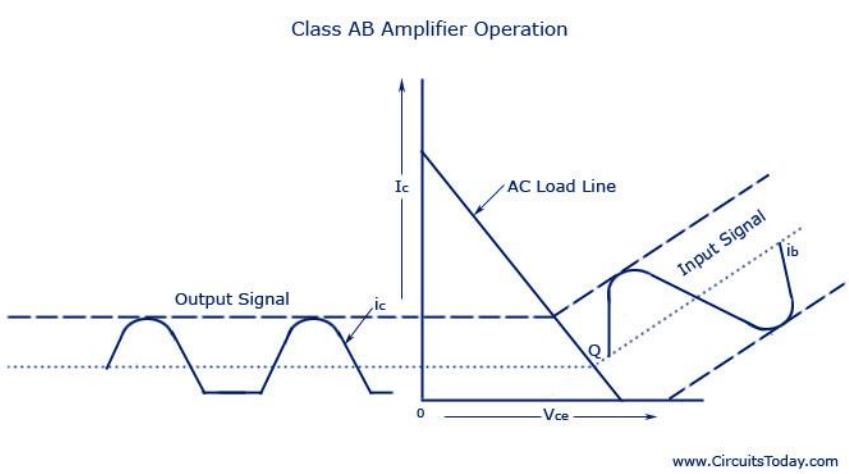

Fig. Biasing arrangement and output wave shapes for class AB operation

CLASS C Amplifier :- In class C operation. The collector current flows less than half cycle of the signal. To get the class C operation, the Q-point is located beyond cut-off region by making BE junction of the transistor as slightly reverse biased as shown in fig.

Only on the positive swing of collector current the transistor comes into conduction for a period less that half cycle. Naturally, class C amplifier has excessive distortion in the output wave. The output actually contains small pulses only which are peaks of sine wave.

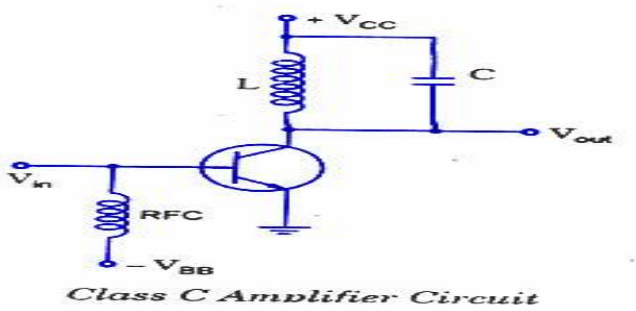

Fig. Biasing arrangement and output wave for class C operation

COLLECTOR EFFICIENCY:- A power amplifier converts a d.c. power from supply in t a.c. power output. Therefore, the ability of a power amplifier to convert d.c. power from supply into a.c. output power delivered to load is a measure of its performance. This is known as collector efficiency and may be defined as;

"the ratio of a.c. output power to the d.c. power (supplied by the battery) of a power amplifier is known a collector efficiency."

AMPLIFIERS:- A large signal amplifier must operate efficiently and be capable of handling large amount of power- typically, a few watts to hundreds of watts. As these amplifiers handles large amount of power i.e. why these are called as amplifier i.e. a power amplifier is one which is designed to deliver a large amount of power to a load. Usually a transistor used in power amplifier has power dissipation rating of half watt or more and is called a power transistor. The transistors having the power dissipation rating less than half watt are called small signal or voltage transistors.

PUSH PULL AMPLIFIER:- A push pull amplifier uses two transistor as shown in fig. this circuit can work in class B, Class AB, or class A operation.

The audio amplifier used in transistor receivers, tape recorders, record players etc. make use of this circuit. These systems are usually operated by batteries (cells).

This amplifier consists of two transistors (npn) and two transformers, one at the input and other at the output end. Both transistors work in class B mode.

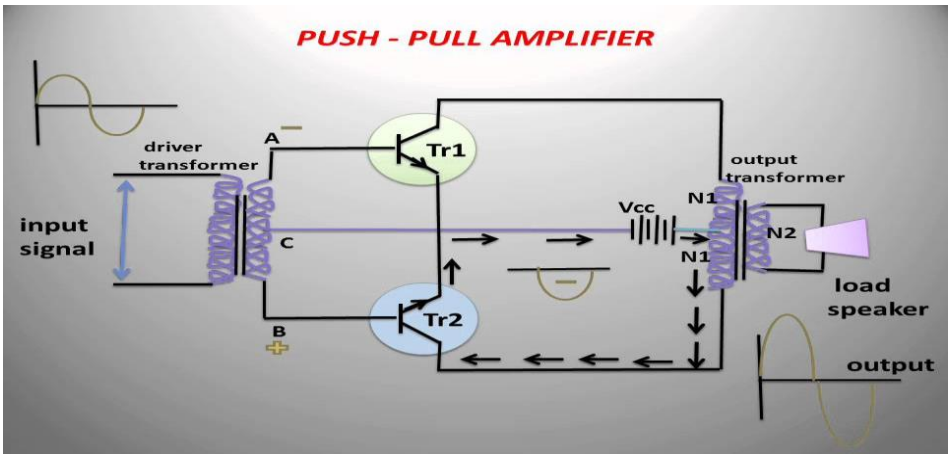

Fig:- Push pull amplifier

The amplifier is called push pull because at a time, one transistor is ON and other is OFF and over next input cycle, the condition is reversed.

COMPLEMENTARY SYMMETRY PUSH-PULL AMPLIFIER:- Complementary push pull amplifier works similarly as push pull amplifier. In push pull amplifier, there is problem of finding centre tap transformer. But there is no need of transformer in complementary push pull amplifier. As clear from its name, it consists of two transistors which are complementary i.e. if one is PNP, then other in NPN. Fig. shows complementary push pull amplifier.

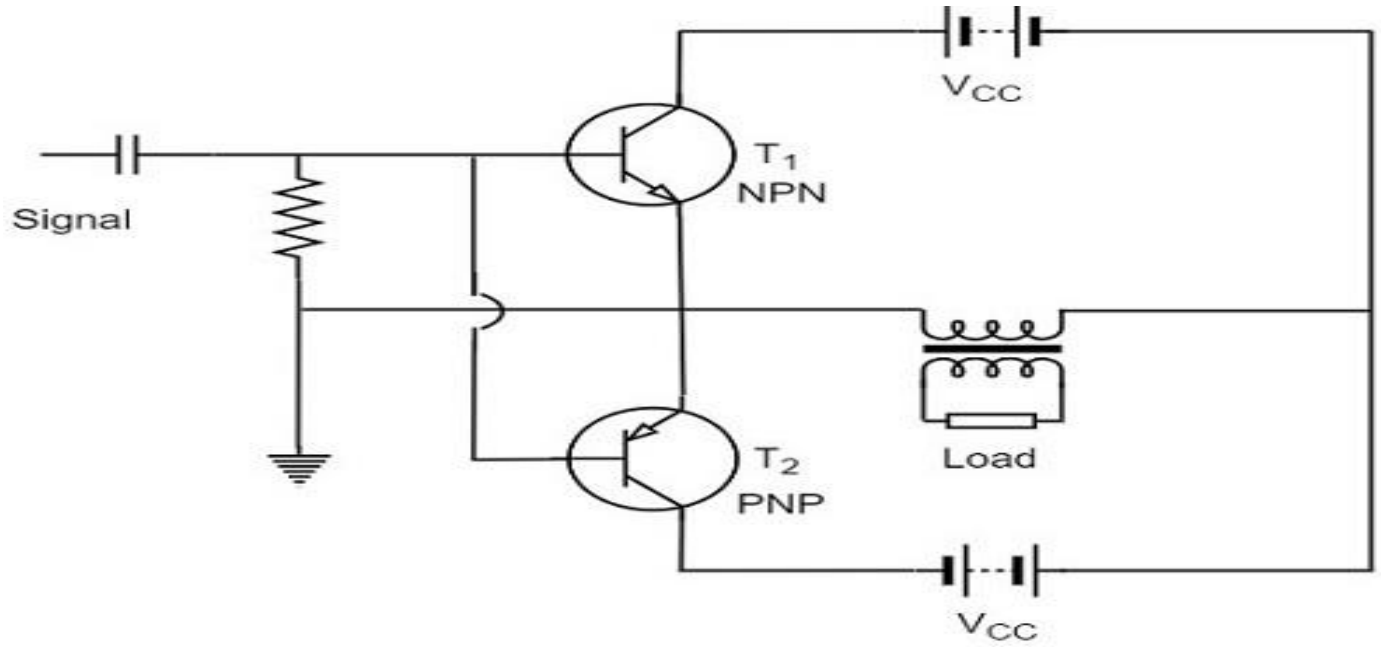

Fig: Complementary Symmetry Push-Pull Amplifier

Operation:- As shown in figure, input voltage is applied to base emitter junction of both the transistor simultaneously. Both transistors T_1 (NPN) and T_2 (PNP) are biased to operate in class B mode. When input signal is in positive polarity, then base emitter junction of transistor T_1 is forward biased and the base-emitter junction transistor T_2 is reverse biased. The transistor T_1 is ON and T_2 is OFF. Therefore current I_1 and primary of output transformer which induces voltage in secondary. The load is connected to secondary winding of the transformer. Similarly, during negative half cycle, Y_1 is OFF and T_2 is ON. Thereby negative half cycle is amplified by transistor T_2. The amplified output appears across the secondary connected to the load.

Advantages:-

1. As this amplifier does not require transformer at input, hence cost of circuit is low as compared to push pull amplifier.
2. Efficiency of this amplifier is high.

Limitations:

1. In this amplifier, two complementary transistors should match in all respects. Any variation in parameters may cause distortion.
2. As the circuit use two transistors which are complementary i.e. one NPN and other PNP, therefore to bias them, two dc supplied are required which is costly.

Ch 3 FEEDBACK IN AMPLIFIERS

FEEDBACK in Amplifiers :- The process of injecting a fraction of output energy of some device or amplifier to its input called feedback.

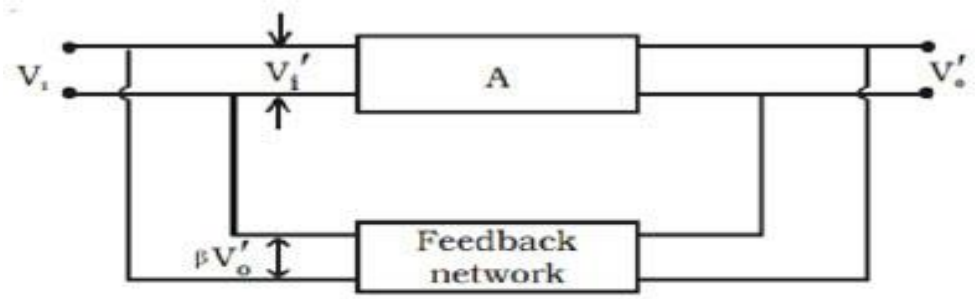

Fig Feedback amplifier

As the word feedback is spelt, it gives an impression that some portion of the output signal of an amplifier is feedback to its input, i.e. again a feedback amplifier is that in which a fraction of the amplifier's output signal is feedback to the input terminals.

The feedbacks in amplifiers not only modify the characteristics of an amplifier but it also improves the gain stability, reduces the distortion and noise level at the output.

TYPES OF FEEDBACK:- Depending upon whether the feedback energy aids or opposes the input signal, the feedback in amplifiers can be;

(i) Positive feedback or
(ii) Negative feedback

(i) Positive feedback:- The system in which feedback signal is in phase with original input signal or voltage is called positive feedback.
The positive feedback increases the original input voltage, thus it is also called as regenerative or direct feedback. Positive feedback increase the gain of the amp lifer but it also produces excessive distortion, hence it is seldom used in amplifiers. However, it is used in oscillator circuits because it increases the power of original signal.

(ii) Negative feedback:- The system in which the feedback voltage is in phase opposition of the original input voltage, is called negative feedback.
The negative feedback decreases the original input voltage, thus it is also called as degenerative or inverse feedback. Through negative feedback results In loss of gain yet it results in higher input impedance, lower output impedance and more stable gain. This is why, it is frequently use in amplifier circuits.

PRINCIPAL OF FEEDBACK:- It is customary to explain the principle of feedback with the help of block diagram as shown in fig A fraction ($\beta v'_O$) of the output (v'_O) is feedback to the input in phase opposition of the original input signal (v_i) which reduces to v'_I

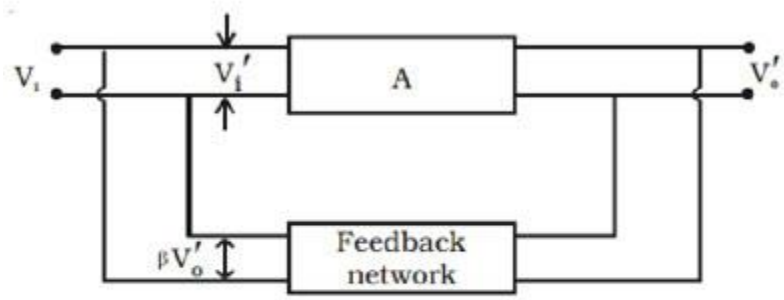

Fig Feedback amplifier

Fig. Block diagram of a feedback system

The voltage gain of this feedback amplifier is then;

$$A_f = \frac{v'_O}{v_i}$$

but the effective input to the amplifier is v'_I and not the external input v_i

here, $v'_I = v_i - \beta v'_O$

where β is known as feedback factor.

Therefore, for the basic amplifier, the input is v'_I and the output is v'_O hence its voltage gain A (internal gain) us given as;

$$A = \frac{v'_O}{V'_I}$$

Or $$v'_I = \frac{v'_O}{A}$$

Not the expression for gain with feedback (A_f) can be derived in terms or A and β, as under:

$$V'_I = v_i - \beta v'_O$$

Or $$\frac{v'_O}{A} = v_i - \beta v'_o$$

Or $$v'_O = Av_i - A\beta v'_o$$

Or $$v'_O + A\beta v'_o = Av_i$$

Or $$v'_o (1+A\beta) = Av_i$$

Or $$\frac{v'_O}{V_i} = \frac{A}{1+A\beta}$$

The ratio $\frac{v'_o}{V_i}$ is called the voltage gain of feedback amplifier.

i.e $$A_f = \frac{A}{1+A\beta}$$

This equation indicates that the voltage gain is reduced with negative feedback by a factor (1+Aβ).

In case of positive feedback, the voltage gain A_f is given by:-

$$A_f = \frac{A}{1-A\beta}$$

This equation indicates that the gain of an amplifier with positive feedback increases. However, for good performance of an amplifier, we always employ negative feedback..

EFFECTS OF NEGATIVE FEEDBACK:- The gain of amplifier with negative feedback is given by equation;

$$A_f = \frac{A}{1+AB}$$

Where, A is gain of amplifier without feedback

B is feedback factor.

From equation, it is clear that gain reduces by factor 1/1+AB but in positive feedback, gain increases.

As negative feedback has number of advantages, that is why inspite of reduction in gain, it is widely used in amplifiers. With negative feedback, gain becomes stable as it becomes independent of variation of parameters of amplifying device. Because in gain equation term ; 1+ AB =˜ AB.

Therefore, gain with feedback will be; $A_f = \frac{A}{AB} = \frac{1}{B}$

So, A_f is inversely proportional to feedback factor. The feedback network mostly consists of passive components. If stable components are used, then gain A_F becomes stable and remains constant inspite variation in open loop gain A due to any reason.

RC COUPLED AMPLIFIER WITH EMITTER BY PASS CAPACITOR:-

RC coupled amplifier is widely used in audio system for amplification of audio signal. It has band width range 10 Hz - 15 kHz. It uses negative feedback in biasing arrangement. This negative feedback stabilized the operating point of amplifier however distortion or gain will reduce. It uses current series feedback. Fig. shows RC coupled amplifier.

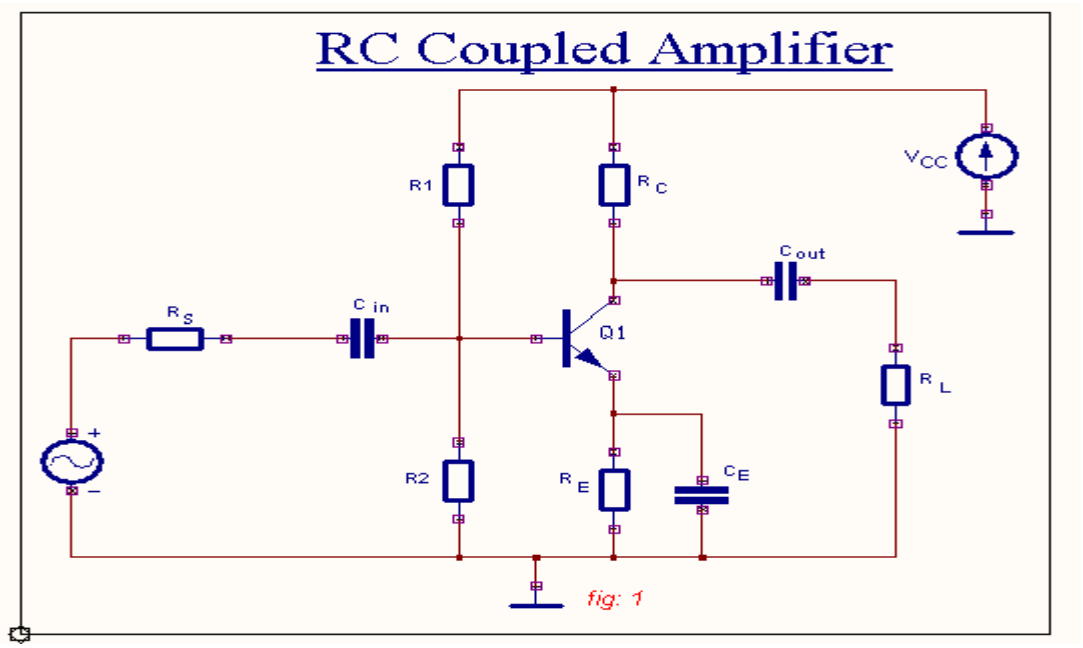

Fig. RC coupled amplifier

For amplification purpose, transistor operates in active region. In most of cases, operating point lies in mid point of DC load line. The transistor is ON and collector current flows in absence of AC input signal. This current is called

operating current. This I_C current also passes through resistance R_e it will cause voltage drop V_e because of dc current C_e is open. This voltage V_e reduces net forward bias voltage between base and emitter junction.

Net base emitter voltage ; $V_b = V_b - V_e = \frac{R_2}{R_1+R_2} V_{CC} - I_eR_e$

As voltage across R_e is of opposite polarity, therefore negative feedback will occur. This is called current series feedback because feedback voltage V_e is directly proportional to output current.

EMITTER FOLLOWER AMPLIFIER:- The emitter follower amplifier is widely used as buffer amplifier. Its has following important features:

1. Gain is unity.
2. Input resistance is high.
3. Output resistance is low.
4. Uses 100% negative feedback.

Emitter follower is also called common collector amplifier because collector is common between input and output of circuit. As circuit input resistance is high, therefore, it avoids loading of previous stage of amplifier.

Circuit diagrams:

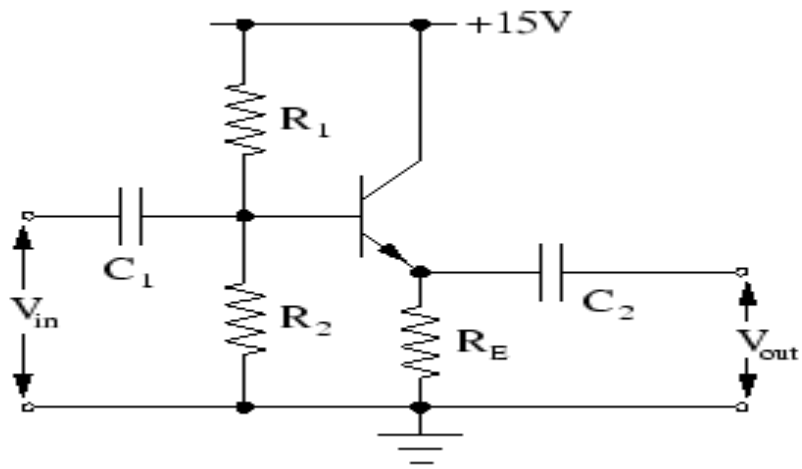

Fig 1. Emitter follower amplifier

When and a.c. signal V_{in} is applied at the input, it results in current I_e flowing through R_e and produces an output voltage across it (e.e. $V_O = i_eR_e$).

It may be noted that when the input signal voltage V_{in} goes through its positive half-cycle, the output V_O is also seen to go through its positive half cycle. Hence, output voltage is in phase with the input signal voltage. In other words, the output voltage i.e. emitter voltage just follows the input voltage and hence the circuit is named as emitter- follower.

As clear from circuit diagram, output is taken across emitter and ground terminal. For AC amplifier, if all dc sources are shorted to ground and capacitors are shorted, then equivalent circuit will be as shown in fig 2.

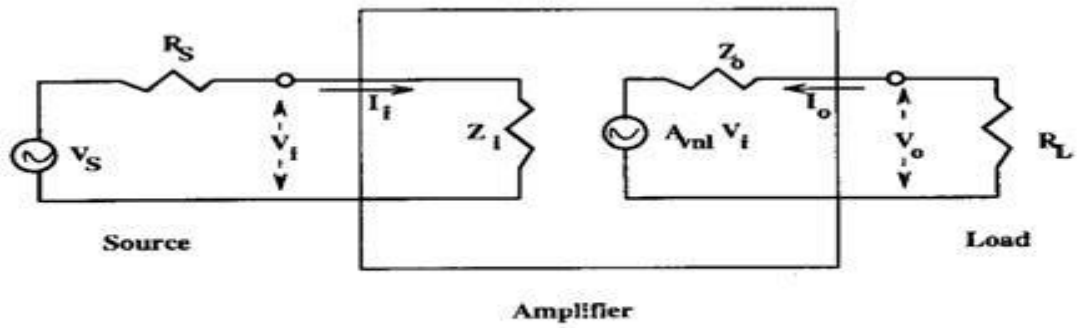

Figure 14.1: Equivalent Circuit of an amplifier

The gain of circuit is,

$$A = \frac{V_O}{V_{in}}$$

Or $$V_O = \frac{V_b R_e}{R_e + R_e}$$

Where r_e is equivalent resistance of emitter.

$$V_b =\sim V_{in}$$

$$R_e =\sim r_e + R_e$$

Hence $$V_O = \frac{R_e}{r_e + R_e} =\sim 1$$

$$V_{in}$$

Therefore gain of emitter follower Is unity i.e. the circuit does not amplify signal. The output follows the input. As output is taken across emitter, the voltage is In same phase and magnitude with input. Therefore, it is called emitter follower circuit.

Application: emitter follower is widely used in audio system as buffer. It is widely used for impedance matching. In most of the amplifiers, input resistance R_i is not high as compared to R_s therefore only fraction of V_{in} voltage appears across R_i. output voltage will be less then actual value. Similarly, output resistance R_O is not low thereby part of amplified input will drop across R_e which further reduces output voltage. Thereby to overcome effect of low input resistance and high output resistance, buffer is connected before amplifier circuit. As its input resistance is infinity (ideal case) therefore entire input is amplified. Similarly, its output resistance is zero (ideal case). Therefore, entire output appears across load.

For emitter follower circuit shown in fig measure input resistance.

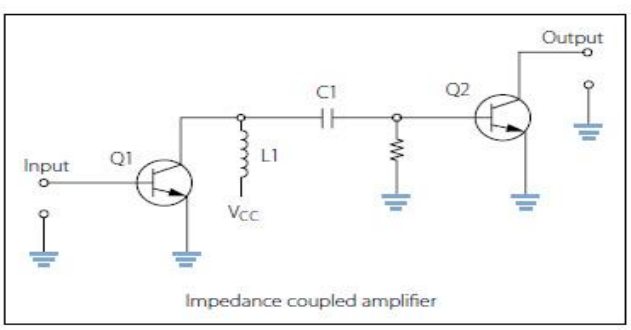

Figure 10-229. Simplified impedance coupling circuit.

CH 4 SINUSOIDAL OSCILLATORS

POSITIVE FEEDBACK:- As oscillators use positive feedback, therefore it is necessary to study effect of positive feedback on gain of amplifier. The fig. shows block diagrams of feedback system.

Sinusoidal Oscillators

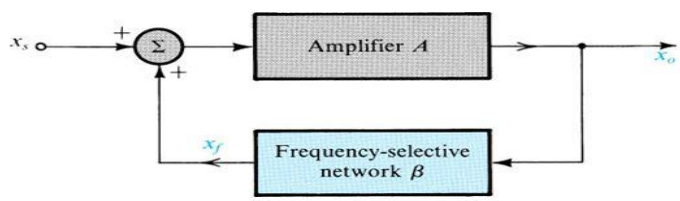

$$A_f(s) = \frac{A(s)}{1 - A(s)\beta(s)}$$

Figure 13.1 The basic structure of a sinusoidal oscillator. A positive-feedback loop is formed by an amplifier and a frequency-selective network. In an actual oscillator circuit, no input signal will be present; here an input signal x_s is employed to help explain the principle of operation.

1

Fig. feedback system.

In an oscillator circuit, feedback network is mostly either RC resonant circuit or LC resonant circuit. The overall gain with feedback is given by the relation;

$$A_f = \frac{A}{1-AB}$$

The relation of overall gain shows that gain will increase with positive feedback. More is the feedback, more will be the gain. But in actual practice, the output cannot increase above maximum rating. Therefore under some condition, output starts oscillating at fixed frequency. The output frequency depends upon component of resonant circuit. In oscillator circuit, no $V_{in\ (input)}$ is present to trigger oscillations. Necessary input is actually noise voltage present in resistance used for the biasing of amplifying device.

BARKHAUSEN CRITERION FOR OSCILLATIONS:- Barkhausen criterion for oscillation provide necessary conditions to be obeyed by feedback systems to provide undamped oscillations. These conditions are :

1. The oscillator will be provide undamped oscillations at frequency for which the total phase shift get introduced as signal travels from input terminal through amplifier, feedback network and to input terminal is precisely zero or integer multiple of 2π.

$\angle$ AB = 0 or 2 nπ where n is integer.

2. The oscillator will produce undamped oscillations at frequency for which loop gain i.e. product of amplifier gain A and feedback network factor B is equal to unity.

TUNED COLLECTOR OSCILLATOR:- Tuned collector oscillators are used to generate sinusoidal wave of frequency less than 1 MHz. fig. shows diagram of tuned collector oscillator.

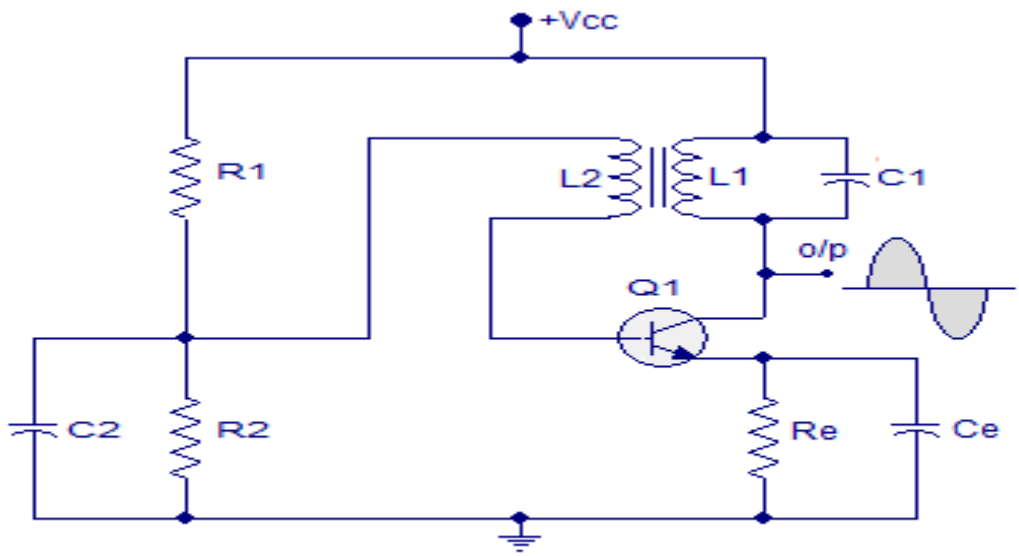

Tuned collector oscillator www.circuitstoday.com

The tuned circuit is placed in collector circuit to determine the frequency of oscillations. The output id developed across tuned circuit, part of output is inductively coupled to input with the help of magnetically coupled coils L_1 and L_2. The windings are so adjusted that positive feedback takes place from collector to base of the amplifier. The resistances R_1 and R_2 are used for bias voltage to transistor. The capacitor C_2 is bypass capacitor. It bypasses high frequency signal otherwise bias voltage across R_2 can change.

Operation:- when the switch S is open, there is no collector current. When switch is closed, the collector current starts raising, thus charging capacitor C. the capacitor C_1 will charge through coil L_1 setting up of frequency.

$$F = \frac{1}{2\pi\sqrt{L_1C_1}}$$

These oscillation will induce an e.m.f. in the coil L_2. The e.m.f. induced in coil L_2 is applied between the terminals of transistor and it is amplified.

Example. An oscillatory circuit has L = 0.01 H and C = 10 pF. Find frequency of oscillations.

Sol. $F = \quad = \frac{1}{2\pi\sqrt{LC}}$

$L = 0.01\ H\ ;\ C = 10\ pF\ \ 10 \times 10^{-12}\ F$

$$F = \frac{1}{2\pi\sqrt{0.01 \times 10 \times 10^{-12}}} = \frac{10^6}{\sqrt{2\pi\ 0.01}} = 500kHz \quad \text{Ans.}$$

COLPITTS OSCILLATOR:- Colpitts oscillator consists of amplifier and resonant circuit. The tuned circuit consists of two capacitors with parallel inductor. The voltage across one capacitor is feedback to input and the feedback is positive. Fig. shows circuit diagram of colpitts oscillator.

Transistor Q_1 works as amplifier, the resistor R_1 and R_2 and r_e, C_e are used for biasing purpose. The Radio Frequency choke coils are used instead of collector resistor in circuit so that RF frequency can not enter into power supply section. The RFC coil block ac but it passes dc. The resonant circuit consists of capacitor C_1 and C_2 and inductor L.

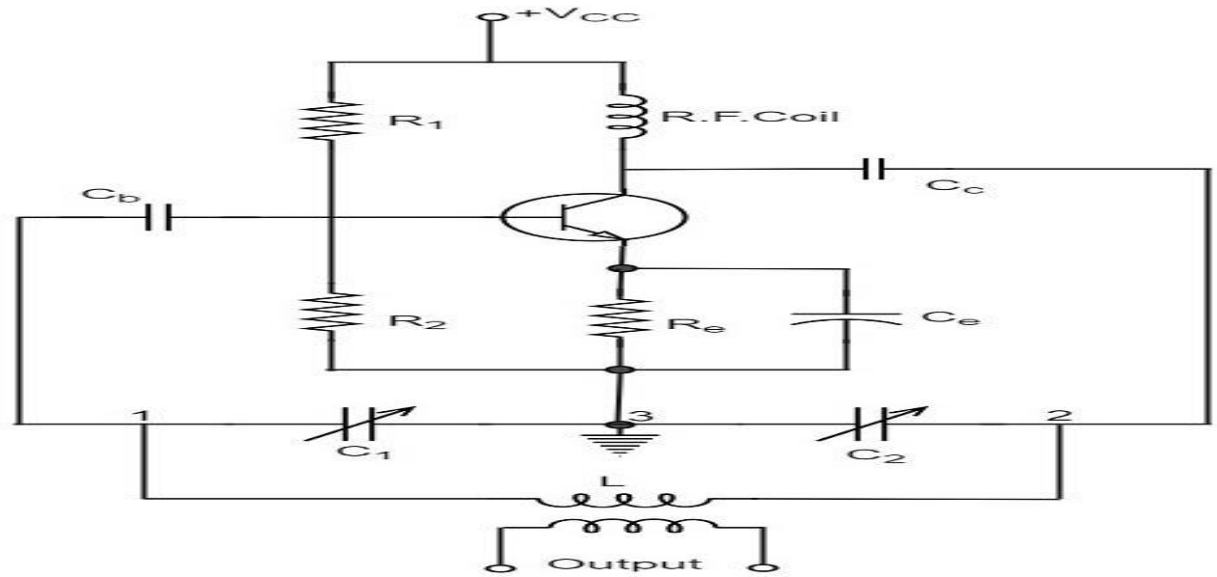

Fig.

When power supply to amplifier is turned ON, the noise voltage across bias resistor is amplified. When voltage appear at out terminal of amplifier, it charges capacitor $C_1$and C_2. Oscillations will appear when capacitors get fully charged and discharges through inductor. The voltage across the capacitor C_1 is feedback to the base of amplifier which amplified. This additional voltage compensates the losses occurred in tuned circuit. Therefore, undamped or constant amplitude wave will appear at output. As per Barkhausen condition for oscillation, the oscillator will generate frequency of oscillations for which;

1. Loop gain is unity.
2. $\angle AB = 0^0$

The frequency of oscillations will be ;

$$F_o = \frac{1}{2\pi\sqrt{LC_T}}$$

Example. Find frequency of oscillation for colpitts oscillator if and L = 2 mH, C_1 = 5µF and C_2 4 µF.

Solution: Total capacitance of tank circuit.

$$C_T = \frac{C_1C_2}{C_1+C_2} = \frac{5x4}{5+4} = \frac{20}{9}\ \mu F = 2.22\mu F$$

Frequency of oscillation, $f_o = \frac{1}{2\pi\sqrt{LC_T}}$

$$= \frac{1}{2\pi\sqrt{2x10^{-3}x2.22x10^{-6}}} = \frac{1 \times 10^4}{41} = 243 \text{ Hz Ans.}$$

HARTLEY OSCILLATOR:- The Hartley oscillator uses CE configuration amplifier and resonant circuit. The resonant or tuned circuit consists of two inductors in series. The voltage across one inductor is feedback to amplifier input fig. shows Hartley oscillator.

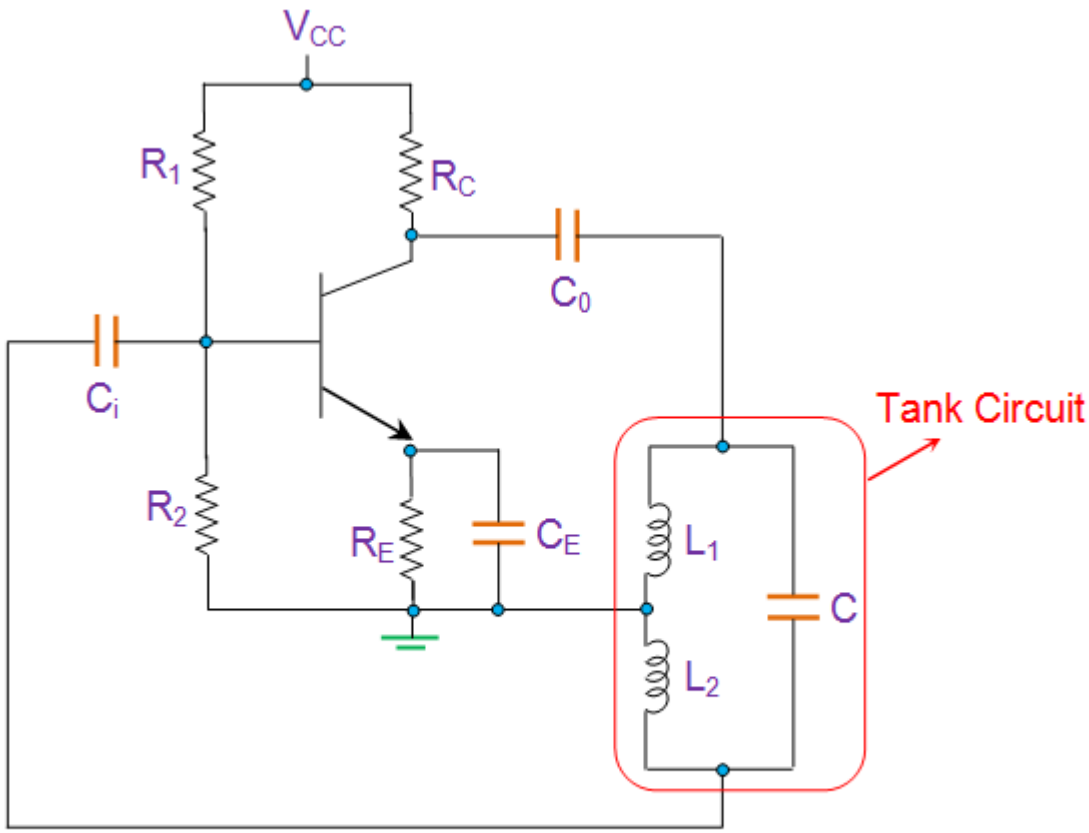

Figure 1 Hartley Oscillator

The transistor T_1 works as an amplifier. The resistors R_1 and R_2 provide necessary bias voltage for transistor. The RFC coils are used to protect dc supply from RF frequency at output of the oscillator.

RFC coil blocks. RF signal as it provides high impedance at high frequency. The resonant circuit consists of two inductors L_1 and L_2 and parallel connected capacitor C. The output wave is collected inductively from inductor L_2. When power supply of oscillator is turned ON, the small noise voltage across resistor is amplified by transistor T_1. This output voltage charges capacitor C when capacitor is fully charged. Then it discharges through inductor L_1 and L_2. Therefore oscillations will appear across tuned circuit. in Hartley oscillator, to obtain undamped oscillations, part of output i.e. voltage across L_2 is fed to input of amplified. This voltage is out of phase (180^0) with output voltage. Then amplifier amplifies this voltage and causes 108^0 phase shift. Therefore, the voltage feedback to resonant circuit is in phase. This voltage compensates the losses in tuned circuit. Hence, undamped oscillations will appear. The frequency of oscillations is determined by component of resonant circuit. it is given by the relation;

$$F_0 = \frac{1}{2\pi\sqrt{L_T C}} \qquad \text{where, } L_T = L_1 + L_2$$

Example. Find resonant frequency of Hartley oscillator, if L_1 = 2 mH, L_2 = 3 mH and C = 10μF.

Solution: Total inductance of tank circuit;

$$L_T = L_1 + L_2 = 2+3 = 5mH$$

Frequency of oscillation ; $f_o = \frac{1}{2\pi\sqrt{L_T C}} = \frac{1}{2\pi\ 5x10^{-3}\ x10x10^{-6}}$

i.e $f_0 = \frac{1}{140.49} \times 10^4 = 71$ Hz

RC PHASE SHIFT OSCILLATOR:- These oscillators are widely used to generate frequency from few hertz to several hundred kHz. These oscillators use RC circuit as resonant circuit. fig. shows RC shows shift oscillator.

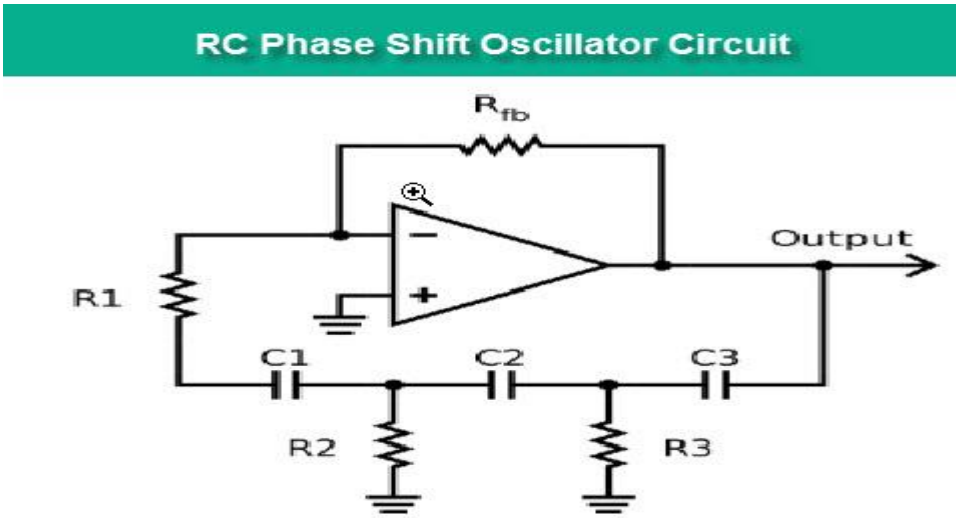

Fig.

RC phase shift oscillator consists of amplifier and feedback network. The feedback network consists of R and C components. It has three RC circuits. Each RC circuit adds 60^0 phase shift. Therefore, three sections will add total phase of 180^0. To obtain total phase shift of 360^0 the amplifier circuit is used. This amplifier causes further 180^0 phase shift. Therefore oscillations will appear at output. The resistors R_1 and R_2 are used for biasing of transistor T_1. The coupling capacitor C_c is used to block dc and to couple any ac part of signal to next stage.

The oscillator will provide oscillations of frequency for which phase shift in feedback network is 108^0 at output. The relation of frequency with component of resonant circuit is given by the following expression;

$$F_o = \frac{1}{2\pi\sqrt{6RC}}$$

The major disadvantage of RC phase shift oscillator is that it provides fixed frequency output. The frequency can be varied only to a limited range.

Advantages :

1. It does not require transformer or inductors.
2. It can be used to produce extremely low frequencies.
3. The circuit provides good frequency stability.

Disadvantages:

1. It is difficult for the circuit to start oscillations because the feedback is generally small.

2. The circuit gives small output.

Example. Find resonant frequency of RC phase shift oscillator, if resonant circuit consists of R = 2 kΩ and C = 10μF.

Solution: In RC oscillator, the frequency of oscillation is

$$F_0 = \frac{1}{2\pi\sqrt{RC}\ 6}$$

$$= \frac{1}{2\pi x 2x10^3 x 10x10^{-6}\ 6} = \frac{1}{307.81} \times 10^3 = 3.2\ Hz$$

Example. RC phase shift oscillator is designed for frequency 500 kHz. If resonant circuit consists of C = 10pF, find value of R.

Solution: Frequency of oscillation :

$$F_0 = \frac{1}{2\pi\sqrt{RC}\ 6}$$

$$R = \frac{1}{2\pi f_0\sqrt{C}\ 6} = \frac{1}{2x\pi 500x10^3 x\sqrt{10x10^{-12}}x\ 6}$$

$$= \frac{1}{76.65} \times 10^6 = 12.99\ k\Omega$$

WEIN BRIDGE OSCILLATOR:- The wein bridge oscillator is the standard oscillator circuit for low to moderate frequencies in the range of 5 Hz to about 1 MHz. it is almost always used in commercial audio generator and preferred for low frequency application. Fig. shows wein bridge oscillator.

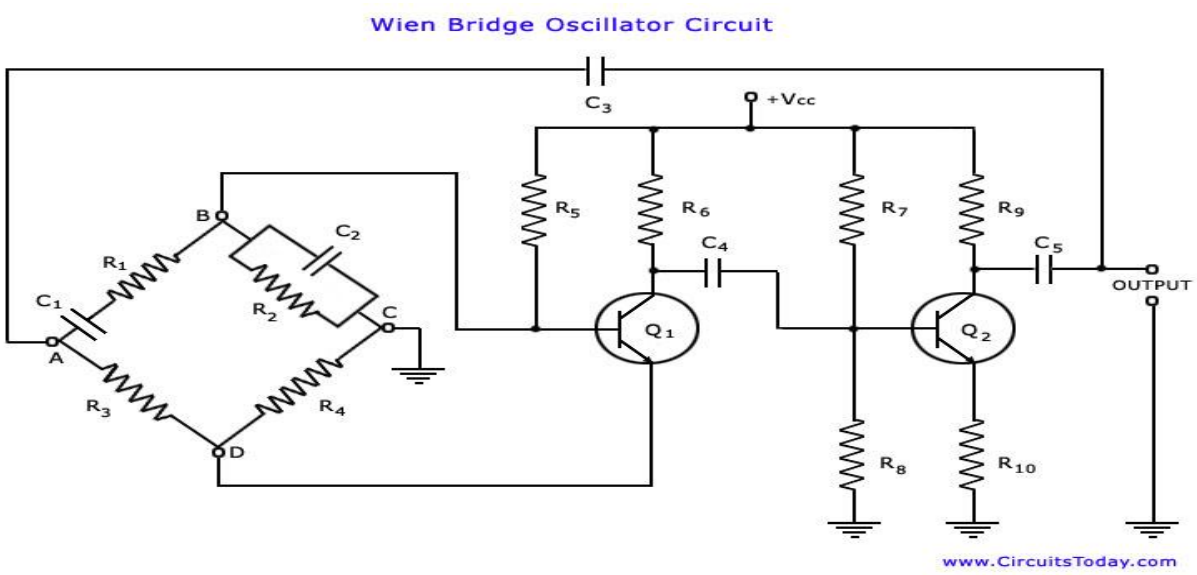

Fig.

Wein bridge oscillator consists of two stage common emitter amplifier. Each stage causes phase shift of 108^0, therefore two stages cause total phase shift of 360^0. The voltage at input of amplifier will be of same phase. The oscillator uses resonant feedback circuit called Lead-lag circuit. at lot frequency, the series capacitor 'C' appears open to input signal and there is no output signal to input of amplifier. At very high frequency, shunt capacitor C looks shorted and there is no output. Therefore in between these two extreme conditions, the output reaches some maximum at resonance. At resonant frequency, phase shift it zero and feedback factor is 1/3.

In wein bridge oscillator, feedback network is form of a bridge circuit. the four arms are;

(1) Resistance R_1
(2) Resistance R_2
(3) Series circuit of R and C
(4) Parallel circuit of R and C.

There are twp types of feedbacks in Wein bridge oscillator circuit. Positive feedback is applied from voltage across parallel RC circuit. Negative feedback is applied from voltage across resistor R_2.

When the circuit power is turned ON, there is more positive feedback than negative feedback. This allows oscillations to build up. After output signal reaches as desired level, the negative feedback becomes large enough to reduce loop gain to unity. The oscillator output oscillator at frequency given by the relation;

$$F_o = \frac{1}{\sqrt{2\pi\ R_1R_2C_1C_2}} = \frac{1}{\sqrt{2\pi\ R^2C^2}} = \frac{1}{2\pi\ RC}$$

If $R_1 = R_2 = R$ and $C_1 = C_2\ C$

The major advantage of Wein bridge oscillator is that frequency of oscillation can be varied to wide range by varying the value of capacitor C.

Advantages :

1. It gives constant output.
2. The operation of circuit is simple.
3. The overall gain of high because of two transistors.
4. The frequency of oscillations can be easily change by using a potentiometer.

Disadvantages:

1. The circuit requites two transistors and a large number of components.
2. It cannot generate high frequencies.

Example. In wein bridge oscillator, if R = 2 kΩ and C= 1000 pF, find resonant frequency.

Solution: for the wein bridge oscillator;

$$F_0 = \frac{1}{2\pi\ RC} = \frac{1}{2x\pi x2x10^3x1000x10^{-12}}$$

$$= \frac{1}{12566.37x10^{-9}} = \frac{1}{12.56}\ x\ 10^6 = 79.61\ kHz$$

CRYSTAL OSCILLATOR:- The oscillators using piezoelectric crystal are known as Crystal Oscillator. The main drawback of oscillator RC and LC resonant circuit is that its frequency is not stable. Because the value of component may change due to temperature and humidity, the tolerance of component is higher, therefore, stable frequency can not be obtained from such oscillators.

The crystal oscillator uses quartz crystal in time circuit. this oscillator provides stable and accurate frequency at output. In many applications, where stable frequency is desirable, crystal oscillator is preferred.

Crystal and its properties: Some crystal found in nature exhibit the piezo-electric effect. When high frequency voltage is applied across such crystals, they start vibrating at frequency of applied voltage. The process is reversible i.e. when mechanical force is applied they generate ac voltage of same frequency. The main substance that produce peizo-electric effect are;

1. Quartz
2. Rochelle salt
3. Tourmaline.

The piezoelectric effect is maximum in Rochelle salt but its mechanical strength is poor. Tourmaline is mechanically strong but show poor piezoelectric activity. The performance of quartz crystal lies in between Rochelle and Tourmaline substances. It is widely used in crystal oscillator. The natural shape of quartz crystal is hexagonal prism with pyramid at ends. For use in oscillator, it is cut into rectangular piece. This piece is mounted in between two metal plates. Then entire crystal is sealed with metallic cap to protect it from humidity. The resonant frequency of crystal is inversely proportional to thickness of its piece.

i.e. $f = \frac{k}{t}$ where, k is constant and t is thickness of crystal slab.

AC equivalent circuit ; fig shows equivalent circuit of crystal.

When ac voltage is applied, it starts vibrating and acts like a tuned circuit. The equivalent tuned circuits consist of inductance of high value with series capacitance C and resistor R. the crystal has 'Q' value in range of thousands (4000 to 10,000). The extremely high 'Q' value makes crystal oscillator highly stable. The crystal exhibits two resonant frequencies. At series resonant frequency, the series LCR current increases. The frequency at resonance will be;

$$F_s = \frac{1}{\sqrt{2\pi LC_s}}$$

At parallel resonance loop current reaches maximum valued. The parallel resonant frequency is;

$$F_P = \frac{1}{\sqrt{2\pi LC_P}}$$

Where $C_P = \frac{C_m C}{C + C_m}$

The frequency of oscillator using crystal in stable. It may drift due to temperature ageing and humidity but change is very small. The frequency drift is less than 1 part in 10^{10} per day. That is why crystal oscillators are preferred for accurate timing operations.

Circuit diagram of crystal oscillator: fig. shows oscillator using crystal in tuned circuit. The transistor T_1 acts as amplifier. The resistor R_1 and R_2 are used for biasing the transistor.

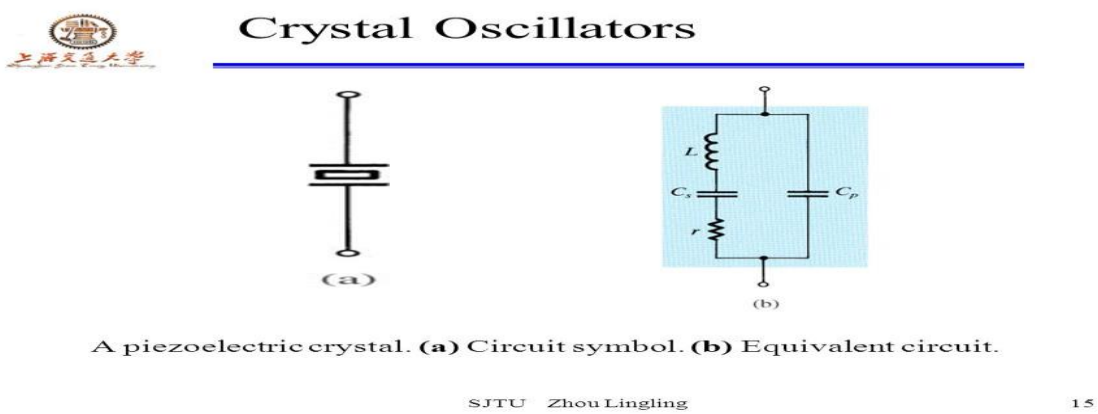

Fig.

The RF coil in collector circuit blocks high frequency but passes dc current to transistor. It prevents high frequency from entering the power supply section.

When supply to oscillator is turned ON, the noise voltage at bias resistor is amplified. The voltage at output of amplifier charges capacitor and when capacitor is fully charged, it discharges. The oscillations will build up at output of tuned circuit. for undamped oscillations, the total phase shift in loop should by zero. The common emitter amplifier shift 180° phase of input signal. The tuned circuit further shift phase to 180°. therefore, total phase shift is 360° and the feedback is positive. The frequency of oscillations will be equal to resonant frequency of crystal. Therefore, frequency is independent of other reactance components in tuned circuit. Hence, it will be stable.

The major advantage of crystal oscillator is stability of frequency. Other advantage is that its Q value is high. But main drawback is that crystal oscillator provides fix frequency waveform i.e. the frequency cannot be changed.

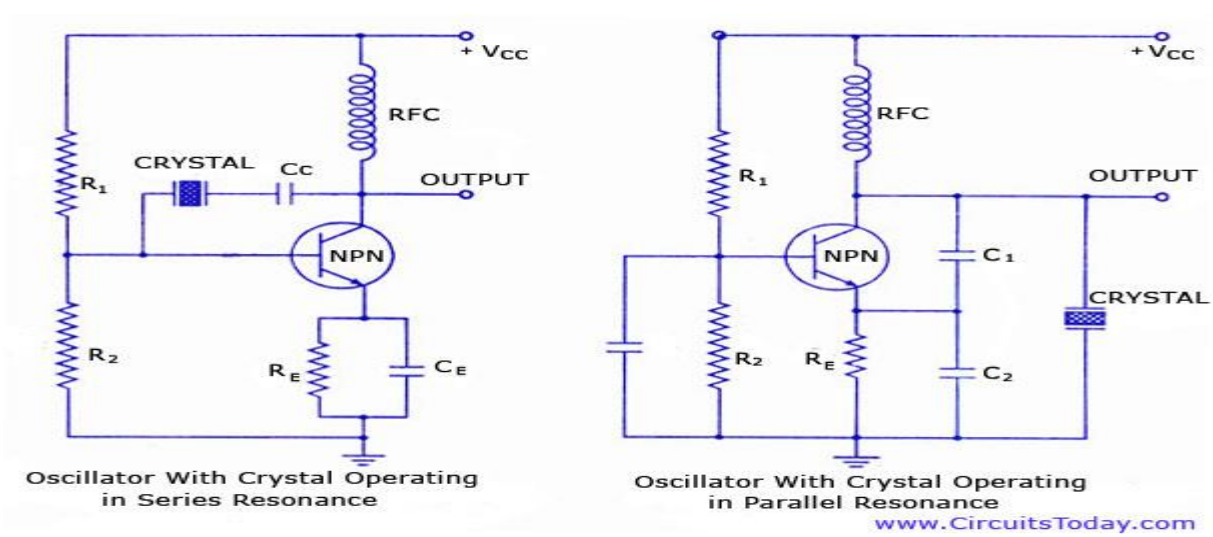

Fig.

Advantages:

1. They have a high order of frequency stability.
2. The quality factor (Q) of the crystal is quite high. The Q factor of the crystal may be as high as 10,000 compared to about 100 of L-C tank.

Disadvantages:

1. They are fragile and therefore can only be used in low power circuits.
2. The frequency of oscillations cannot be changed to a large extent.

CH 5 TUNED VOLTAGE AMPLIFIERS

BANDWIDTH OF RESONANT CIRCUIT:- The range of frequency over which the current in a resonant circuit is 70.7% of the maximum current (current at resonance) is called as bandwidth of a resonant circuit.

This range is also called as the pass-band of the circuit. fig. shows the frequency response of a series resonant circuit. the range of frequency between f_1 and f_2 is called bandwidth of the circuit. i.e.

Bandwidth , B.W = $f_2 - f_1$ since the Q of the circuit determines the overall steepness of the response curve, the bandwidth may also be determined in terms of the resonant frequency (f_r) and Q of the circuit.

Thus, $(f_2 - f_1) = B.W = \frac{f_r}{Q}$

The higher the valued of Q of a series resonant circuit, the smaller is the bandwidth and greater is its ability to selected of reject a particular narrow band of frequencies.

PARALLEL RESONANT CIRCUIT:- When a capacitor is connected in parallel with an inductor and the combination connected across an a.c. supply is called a parallel resonant circuit. fig. shows

The resistance R represents the coil resistance. Its value is generally very small is neglected compared to to the other impedances. The capacitor C is assumed to be lossless. The frequency of the source V_s can be varied.

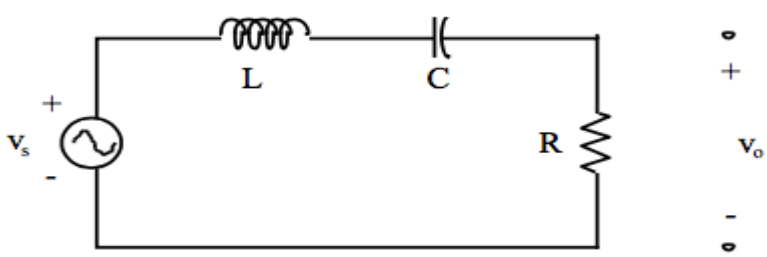

Figure 6.1 Series *RLC* resonant circuit.

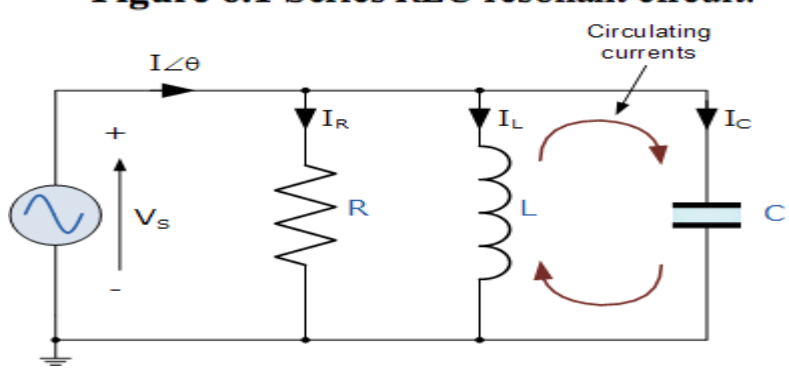

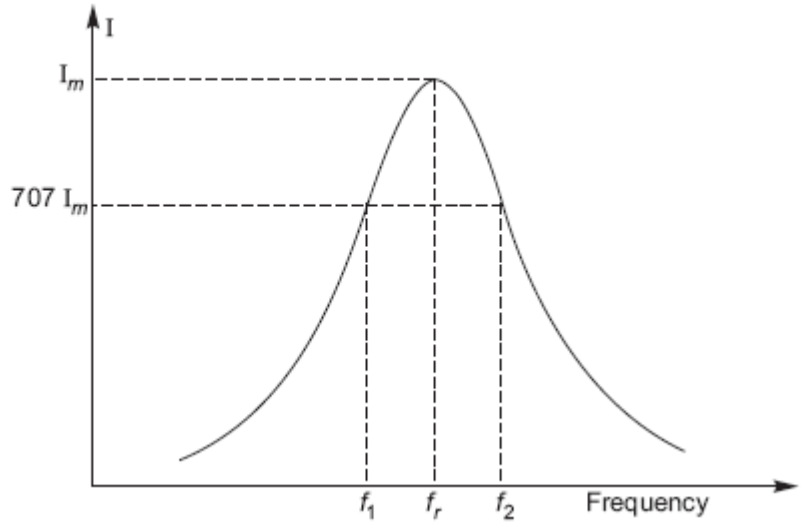

Fig.

In and ideal parallel resonant circuit (with R=O), at resonance, $X_L = X_C$. the circuit offers infinite impedance to the line ,as line current is zero, ($I = I_L + I_C$ but I_L and I_C are equal and out of phase with respect to each other as shown in fig. But in a practical circuit, the inductor coil has some resistance that appears in series with L. thus the line current at resonance is not zero but has minimum valued. The resultant line current at I is in phase with the voltage V_S, and the impedance Z_P of the circuit is maximum and resistive.

At resonance, $X_L = X_C$, therefore the resonance frequency of a parallel resonant circuit is approximately same as that for the series resonant circuit. i.e.

$$F_r = \frac{1}{2\pi\sqrt{LC}}$$

The impedance of a parallel resonant circuit is given as;

$$Z_P = \frac{(R + j\omega L)\frac{1}{j\omega C}}{R + j\omega L + \frac{1}{j\omega C}}$$

At resonance, $X_C = X_L$

For circuit having Q = 10 or more,

$R + j\omega L = j\omega L = X_L$

Therefore, at resonance;

$$Z_P = \frac{X_L \cdot X_C}{R} = \frac{2\pi f, L \times \frac{1}{2\pi f_r C}}{R} = \frac{L}{CR}$$

SINGLE TUNED VOLTAGE AMPLIFIER:- A single tuned amplifier is shown in fig. A parallel resonant circuit is connected in the collector. Usually, capacitor connected in tuned circuit is kept variable. Then components R_1, R_2 and R_E is used to bias the transistor properly and to stabilize the operating point so that it remains in the middle of active region of the transistor. The output is connected to the load with inductive coupling.

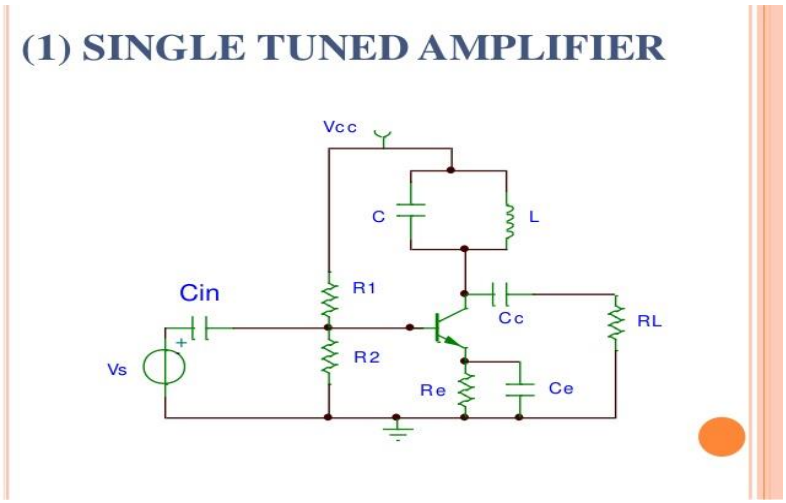

It selects and amplifies only a narrow band of frequencies and rejects all frequencies out side this band. The tuned circuit in the output offers a large output load impedance at its tuned frequency and a low impedance at all other frequencies. Since the amplitude of the output signal depends on the value of output impedance, there-fore, a large output will develop only at tuned frequency of the circuit.

The frequency response of a single tuned amplifier is shown in fig. the voltage gain of the amplifier is given as

$A_V = \beta Z_P$

$r_{in} \angle \quad 180^0$

As the impedance of the parallel tuned circuit, $Z_P = \frac{L}{CR}$

$$A = \frac{\beta \frac{L}{CR}}{r_{in}} \angle 180^o$$

the bandwidth of the amplifier (f_2-f_1) is given by $B.W = \frac{f_r}{Q}$

The selectivity of the amplifier depends upon the quality factor Q of the coil used in the tuned circuit. A high Q of the circuit gives high selectivity and high gain too but at the same time its bandwidth will be very much reduce. A very narrow band will reduce. A very narrow band will results in poor reproduction. This is the main drawback of a single tuned amplifier.

DOUBLE TUNED VOLTAE AMPLIFIER:- To obtain high selectivity, high gain and required bandwidth, double-tuned voltage amplifiers are used. The main disadvantage of single tuned voltage amplifier i.e. low bandwidth and undesirable attenuation are overcome by using double tuned voltage amplifier.

Circuit diagram: The circuit shown in fig. is that of a double tuned voltage amplifier and is almost similar to that of single tuned voltage amplifier in construction. The only difference is that the single tuned circuit is replaced by a double tuned circuit.

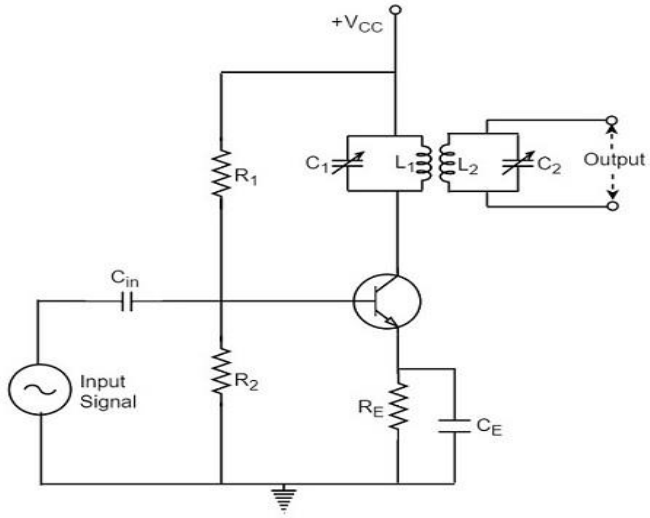

Fig. Double tuned voltage amplifer

Operation: When a signal containing many frequencies is applied at the input, only that frequency is selected which corresponds to the resonant frequency of tuned circuit L_1C_1) , rejecting all other frequencies. The tuned circuit offers very high impedance to this signal frequency. Consequently, the amplified output appears across the tuned circuit L_2C_2 through mutual induction. The frequency response of a double tuned circuit depends o valued of L_1 and L_2.

Frequency response: fig. show response curve of double tuned voltage amplifier. The gain of amplifier is maximum for frequency very close to resonant frequency of tuned circuit. for other frequencies, gain is low. The bandwidth of amplifier is the range of frequency for which gain of more than 70.7% of maximum gain. The bandwidth is more than that of single tuned amplifier

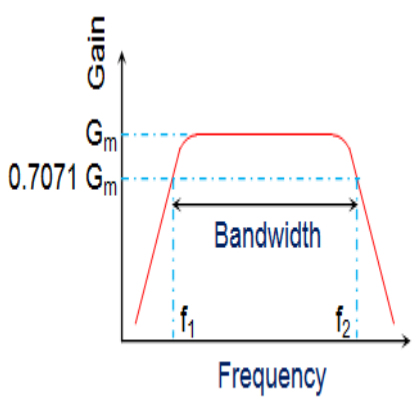

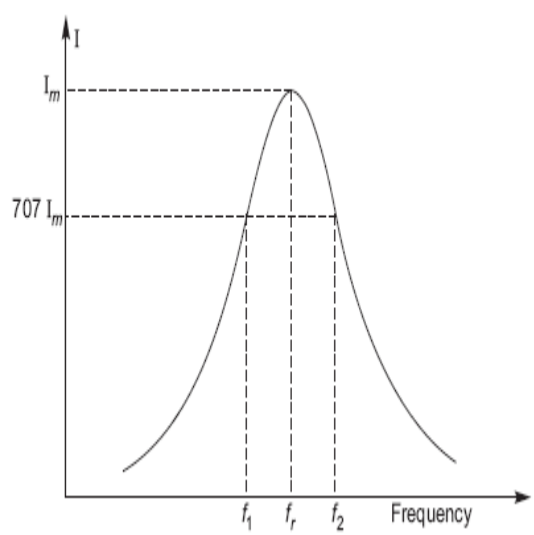

Figure 2 Frequency Response Curve of a RC Coupled Amplifier

Fig.

The bandwidth of amplifier is directly proportional to the coefficient of coupling of tuned circuit. By proper selection coupling factor, desired selectivity and bandwidth can be obtained from this amplifier.

Ch 6 Multivibrator Circuits

TRANSISTOR AS A SWICH:-

Transistor can be employed as an electronic switch. To understand its working, consider a npn transistor. In the circuit, a load R_C is connected in the collector circuit across the supply V_{CC}. when transistor is used as switch, it is operated in cut-off and saturation region.

Cut OFF region: When the input base voltage is zero or negative, the transistor is said to be in the OFF condition. In this condition, base current, $I_b = 0$ and the collector current is equal to the collector leakage current I_{CEo}.

In both, cut off and saturation regions, power loss is quite low and therefore efficiency of transistor as a switch is quite high.

Power loss = Output voltage x Output current

In the OFF condition, the output voltage = V_{CC} since voltage drop in the load due to I_{CEo} is negligible.

Power loss = $V_{CC} x I_{CEO}$

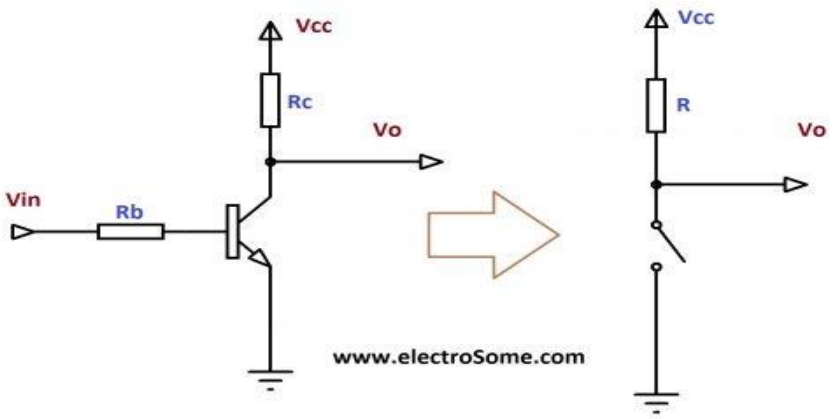

Fig. Transistor as a switch

Saturation region: When the input voltage is made so much positive that saturation collector current flows, then transistor is said to be in the ON condition.

Working: When the switch S is open, the transistor is in cut-off state and no current flows in the collector circuit. Thus, the transistor behaves as an open switch for the collector circuit.

When the switch S is closed, base-emitter junction is forward biased and the transistor comes into the conduction state. At this state, current flows in the collector circuit. Thus, the transistor behaves as a closed switch.

The transistor is said to be in ON state if

$$V_o = V_{ce\,(sat)}$$

$$I_C = \frac{V_{CC}}{R}$$

When input voltage $V_S = 0$, then base emitter junction is not forward biased. Therefore, transistor is OFF i.e. no current will flow through the transistor. At this condition,

$$V_o =\sim V_{CC}$$

And $$V_C = 0$$

Advantages: the following are the advantages of transistor switch over other types of switches:

1. It has no moving parts and hence there is little wear and tear.
2. It gives noiseless operation.
3. It has smaller size and is lighter in weight.
4. It gives trouble free service because of advantage of being solid state.
5. It is cheaper than other switches and requires less maintenance.
6. It has a very fast speed of operation as compared to the mechanical switches which have a small speed of operation.

Application: Following are the applications of transistor as a switch:

1. Transistor is used as switch to drive LED display.
2. Transistor is extensively used as switch in modern inverters.

MULTIVIBRATOR:- An electronic circuit that generates square wave is called a multivibrator.

Ordinarily, if we have to produce a square wave then switch in a dc circuit. Switch is turned ON and OFF at regular intervals.. the wave shape thus obtained across the load will be a square wave. Hence, a multivibrator can be used as a switching circuit.

Principal: Every multivibrator has two transistors, each of them acts as an electronic switch. The two transistors (switches) are fully in the OFF or ON state alternatively. The switches stay in either ON position or OFF position for a fixed duration of time set according to the circuit. fig. shows block diagram of a multivibrator having two stage amplifier with 100% positive feedback.

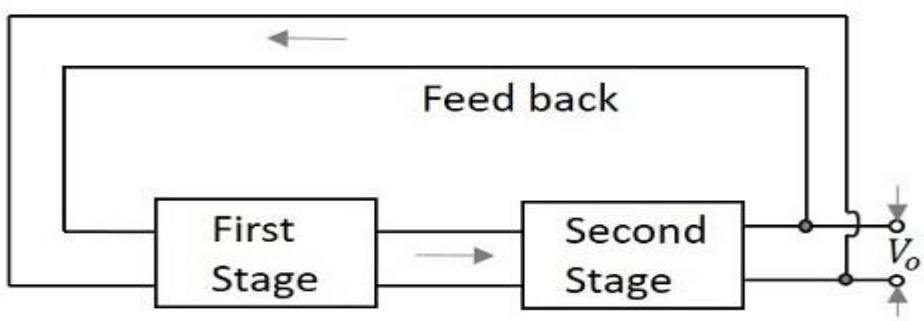

Fig.

Depending upon the manner in which the two stages of a multivibrator interchange their states, the multivibrator are classified as:

1. Astable or free running multivibrator.
2. Monostable or one-shot multivibrator.
3. Bi-stable or flip-flop multivibrator.

The astable or free running multivibrator fluctuates automatically between the OFF and ON states and remains in each for a time dependent upon the circuit constants. Therefore, it is just an oscillator since it requires no external pulse for its operation. Although it requires a source of dc power.

The monostable or one-shot multivibrator has only stable and one quasi-stable (i.e. half-stable) state. The input pulse triggers the circuit into its quasi-stable, in which it remains for a period depending upon circuit constants. After this period of time, the circuit returns to its initial stable state.

The bistable multivibrator has both the two states stable. It employs the application of an external triggering pulse to change the operation from either on state to the other. Therefore, one pulse is used to generate half-cycle of square wave and another pulse to generate the next half-cycle of square wave.

BISTABLE MULTIVIBRATOR:- As name implies, bistable multivibrator circuit has two stable states. These states can be exchanged by application of an external trigger pulse. This circuit consists of two amplifiers. The output of one is directly coupled to input of the other fig. shows bistable multivibrator circuit.

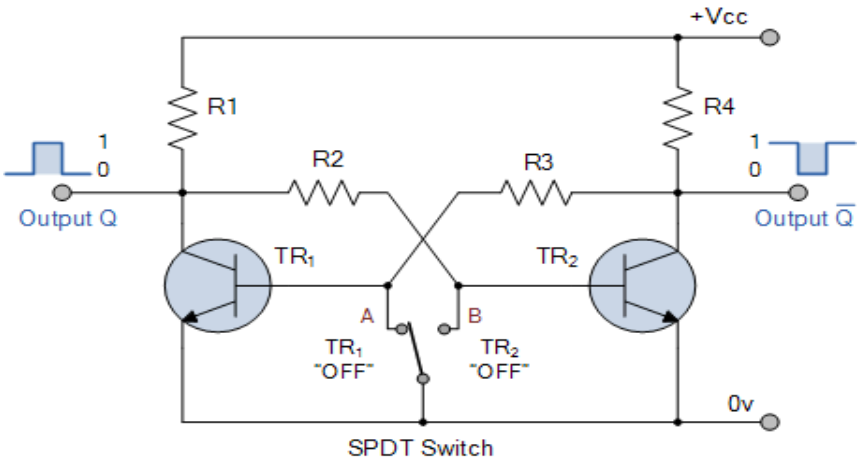

Fig. Bistable multivibrator

Bistable multivibrator consists of two amplifiers. Transistor T_1 and its associated biasing circuit forms one amplifier. The second amplifier consists of transistor T_2 and associated biasing circuit. These two amplifiers are matched in all parameters. The output of transistor T_1 is coupled to input of transistor T_2 through resistor R_1 parallel to C_{m1}. Similarly, output of transistor T_2 is coupled to input of T_1 through resistor R_2 parallel to C_{m2}.

Operation : When power supply to circuit is turned ON, the current flows transistor T_1 and T_2 as shown in fig. as two transistor cannot be of same parameters completely, let there be case that I_{C1} is slightly more than I_{C2}. As I_{C1} is more, collector voltage of T_1 is low. This voltage is coupled to input of T_2. As a result, base voltage of T_2 will reduce and hence collector voltage of T_2 increases. This collector voltage is coupled to input of T_1. The forward bias voltage at input of T_1 increases. As a result, collector current further increases and collector voltage decreases. This

commutative action causes transistor T_1 to turn ON and T_2 OFF. This is stable state of multivibrator. The bistable multivibrator remains in stable state until trigger pulse is applied to change the state.

To change state of circuit, let a negative pulse is applied at base circuit of transistor T_1. This negative pulse reverse biases the base-emitter junction of transistor T_1. Therefore, collector current decreases and voltage at collector increases. This increased voltage is coupled to base therefore base-emitter voltage of transistor T_2 will increase. The collector current of T_2 increases whereas the collector voltage decreases. This decrease in voltage reduces base voltage of T_1. Therefore T_1 transistor is turned OFF and T_2 turned ON. The circuit remains in this two stable state until trigger pulse is applied. Capacitors C_{m1} and C_{m2} are called cumulative capacitors. It is used to reduce transition time of state. If capacitor is not used, then because of input capacitance of amplifying devices T_1 and T_2, voltage at base does not change instantaneously with change in voltage in collector. The rate of change of base voltage with collector voltage is increased with capacitors C_{m1} and C_{m2}. These capacitors increase speed of the transition of states.

Bistable multivibrator is used as one bit memory storage device. It is used to store binary bit. Whenever memory is to rewrite, trigger pulse is used.

MONOSTABLE MULTIVIBRATOR:- As name implied, monostable multivibrator has only one stable state. The other state is quasi-stable. When an external trigger signal is applied, the output of circuit changes to quasi-stable state. The circuit stays in this state for pre-determined length of time and then reverts to stable automatically. The time duration which output stays in quasi-stable state depends on RC circuit in monostable multivibrator. Fig. shows circuit diagram of monostable multivibrator.

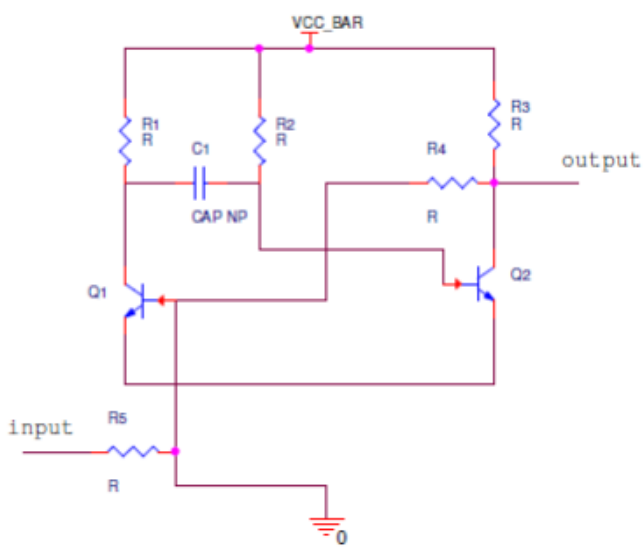

Monostable Multivibrator Circuit Diagram

Fig. Monstable Multivibrator

The circuit consists of two transistors T_1 and T_2 working as an amplifier. The output of T_2 is coupled to input of T_1 through resistive attenuator. The capacitor C_{m2} is speed up or commutator which reduces transition time of state. The output of transistor T_1 is coupled to input of T_2 through capacitor C and base is connected to V_{CC} through resistor R.

Operation: As shown in fig. it is clear from the circuit that base of transistor T_1 is connected to negative supply voltage – V_b with resistors R_1 and R_2. It keeps T_1 OFF and T_2 is ON. This is stable state of multivibrator.

Let a negative trigger be applied to the collector of transistor T_1. This trigger pulse reduces voltage at base of transistor T_2. Therefore T_2 is turned OFF. The collector voltage is approximately V_{CC} which is feedback to base of transistor T_1. This causes T_1 to turn OPN. The collector voltage of T_1 is zero. This is quasi-stable state.

$T_1 \rightarrow$ ON

$T_2 \rightarrow$ OFF

The circuit stays in the quasi-stable state for only a finite time. The base of T_2 is connected to V_{VV} through R. Transistor T_1 is ON and collector voltage is zero, therefore capacitor C charges through R and T_1. When voltage across capacitor C reaches cut in voltage, transistor T_2 is turned ON and starts conduction. A regenerative action begins which ultimately turns T_1 OFF and T_2 ON. Therefore, circuit stays in quasi-stable state for the time during which, capacitor charge to cut in voltage. Therefore, this time depends upon time constant of RC circuit.

ASTABLE MULTIVIBRATOR:- Astable multivibrator is used for generating period square waveforms. It is also called free running multivibrator. It does not have any permanent stable state. It has two quasi-stable states. The circuit changes state continuously from one quasi-stable state to other after predetermined length of time. It does not require external trigger pulse to change state. The length of time duration for which circuit stays in one state is determined by circuit time constants. Fig shows circuit diagram of astable multivibrator.

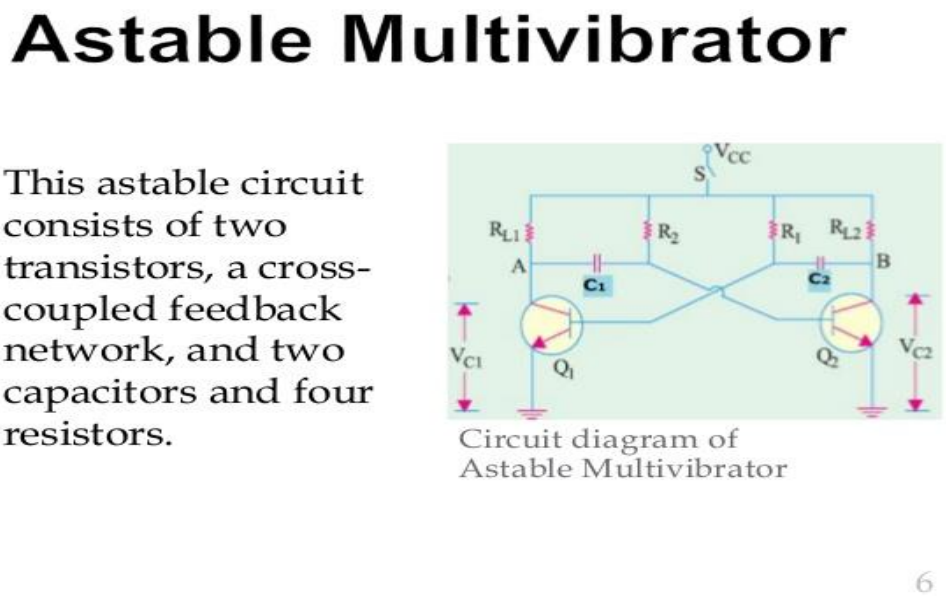

Fig. Astable Multivibrator

Astable multivibrator consists of two common emitter amplifiers. The output of transistor T_1 is coupled to base of T_2 through capacitor C_1. Similarly, output of transistor T_2 is coupled to base of T_1 through capacitor C_2.The resistors R_{b1} and R_{b2} provide necessary bias voltage to base of transistors, T_1 and T_2.

Operation: let the power supply of circuit is turned ON. As a result, circuit flows through transistors T_1 and T_2. Let us suppose due to small mismatch in transistor parameters, current I_{C1} is more than I_{c1}. It causes collector voltage of T_1 to decrease. This fall in voltage causes fall in voltage at base voltage of T_2 will follow voltage at collector of T_1. This fall in voltage at base causes current I_{c2} to decrease and the collector voltage of T_2 increases. This rise in voltage is coupled to base of T_1. As result, bias voltage of T_1 increases and T_1 starts conducting current and is ON whereas T_2 is OFF.

Fig. shows waveform output of T_1 and T_2. T_1 is ON and T_2 OFF.
Under this condition one end of capacitor C_1 is grounded through ON transistor T_1 and other end is connected to supply V_{bb} through resistor R. This capacitor is connected to base of transistor T_2. As voltage across capacitor reaches cut in potential i.e. Threshold voltage required on turn ON T_2 the transistor T_2 starts conducting at time t_1 as shown in fig. the collector voltage of T_2 decreases and this fall in voltage causes fall in voltage at collector of T_1 increases and collector current decreases. This rise in voltage at collector further causes T_2 to turn ON. Therefore after time t_1, T_1 is OFF and T_2 is ON.
Similarly at time t_2 capacitor C_2 charges to change state of transistor. Therefore, output changes from ON state to OFF state. The time T_1 and T_2 depends on R_{b1} and R_{b2} C_2. Proper selection of time constant generates accurate square wave at output.
IC 555 TIMER:- 555 timer I_c is widely used timer in electronic equipments. In most of application, timer works as monostable and astable multivibrator. In the monostable mode, it can produce time delay from micro second to hours. In the astable mode, it can produce rectangular waves with variable duty cycle, the timer is available in following versions:

1. 555 single timer chip

	Temperature range
For example SE 555 ----------	-55 ^{0}C to + 125 ^{0}C
NE 555 ----------	0 ^{0}C to 70 ^{0}C

2. 556 Dual timer chip
   There are two timers on single IC.
3. 7555 is CMOS version.

Timer is available in 8 pin IC. The pin diagram is as shown in fig.

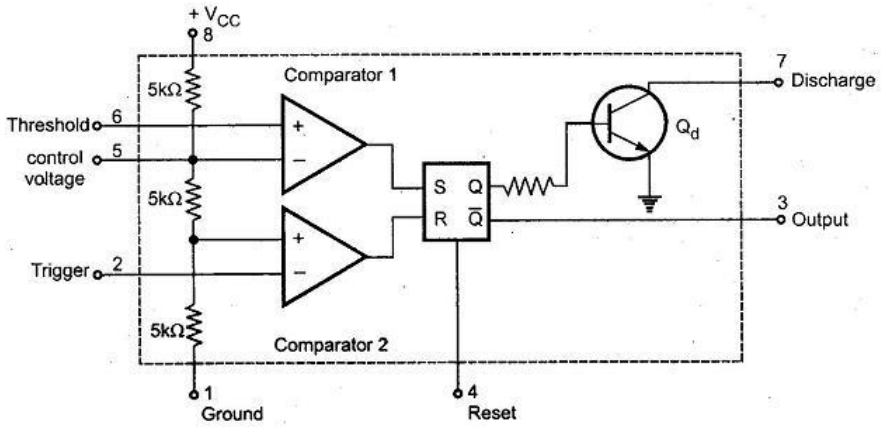

Fig. 2.100 (b) Block diagram of IC 555 timer

Fig. Block Diagram of UC 555 Timer

BLOCK DIAGRAM OF 555 TIMER: 555 timer consists of the following components fabricated on IC chip.

1. Two comparators.
2. Voltage divider circuit that consists of three series resistances of value 5 kΩ.
3. RS flip flop.
4. Npn transistor.

The voltage divider circuit creates two voltage level. The voltage level at inverting terminal of comparator 1 is 2/3 V_{CC}. The voltage level at non inverting terminal of comparator 2 is 1/3 V_{CC}. Timer has 8 pins as shown in block diagram. The function of each pin has been as described as follows:

Pin 1 (GND): This pin is for ground purpose. When timer is used in electronic circuits, this pin is connected to ground. Voltage at all other pins are measured with respect to this pin.

Pin 2 (trigger): When 555 timer is used as a monostable multivibrator, this pin is used to inject trigger signal. This trigger signal is required to change state of circuit from stable of circuit from stable to quasi-stable state. This pin is connected internally to inverting terminal comparator-2. The voltage at non-inverting terminal is 1/3 V_{CC}. The comparator output will change only when negative voltage of trigger is more that 1/3 V_{CC}.

Pin 3 (output): This pin is also called output pin. There are two ways to connect load to timer output.

1. Load is connected between pin 3 and ground. The current flows from output to ground when output is high.
2. Load is connected between pin 3 and power supply V_{CC}. In this case, when output is low, the current flows from V_{CC} to pin 3 through load. When output is high, no current flows through load.

Pin 4 (reset): This is used to reset timer. When negative pulse is applied at this pin, it causes timer to stop operation and returns to stable state. To avoid false trigger, when pin 4 is not used, it is connected to V_{CC}.

Pin 5 (control voltage): This is controls voltage pin. The voltage at this pin is 2/3 V_{CC}. If pulse width of timer is to be change, than external voltage can be applied at this pin. When pin is not in use, then it is connected to ground through capacitor to eliminate chance of noise voltage at pin 5.

Pin 6 (threshold): This pin is internally connected to non-inverting terminal of comparator-1. The voltage level at this pin set condition to change output of comparator-1. If voltage at pin is more than 2/3 V_{CC} output go to high state.

Pin 7 (discharge): This pin is connected to collector of npn transistor. The base of transistor is connected to Q output of RS flip flop. When Q is high and Q is low, then transistor is OFF. The pin 7 is open. When Q is high, transistor turn ON and the pin 7 is grounder through the transistor. If an external capacitor is connected, it discharges through this pin. Hence, it is called discharge pin.

Pin 8 (dc supply): This pin is for supply voltage. The voltage rating for timer is from + 5 V to 18 V.

IC555 as MONOSTABLE Multivibrator :- The monostable multivibrator circuit has only one stable state. When trigger pulse is applied to circuit, the output shifts from stable state to quasi-stable state. The time duration for which output remains in quasi-stable state depends on RC circuit. after finite time, circuit automatically reverts back to stable state fig. shows timer as monostable multivibrator.

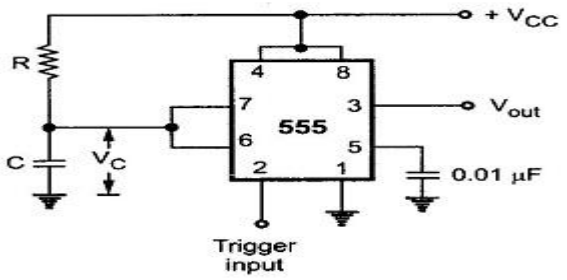

Fig. 2.104 555 timer as monostable multivibratorr

Operation:- When timer is used as a monostable vibrator, the resistor R is connected between pin 8 and 7. The capacitor between pin 6 and ground. Pin 2 is used for trigger pulse and output is taken at pin 3.

Let output of RS flip flop is high i.e. Q is high and Q is low. Therefore, stable output is low. The high Q forward biases base emitter junction of transistor T_1. Therefore, one end of capacitor is grounded through 'ON' transistor. The circuit will stay in stable state (low) until trigger pulse is applied. When trigger pulse is applied at pin 2, the output of comparator 2 is high. The amplitude of trigger pulse should be more than 1/3 V_{CC} and should be negative. Therefore, flip flop resets and output Q goes high. Now output Q is low and it turns off transistor T_1. The short circuit across capacitor C is released. Not capacitor starts charging to V_{CC} through R when voltage across capacitor reaches 2/3 V_{CC}. Now comparator 1

Output change and goes to high state which set flip flop. Q is high and Q is low and the circuit returns to stable state. High Q turns ON transistor T_1 and the capacitor through transistor T_1. The output of circuit stays in stable state until trigger pulse is applied.

The time duration for which the output remains high depends upon time taken by capacitor to charge from 0 V to 2/3 V_{CC}.

Let initial voltage across capacitor is 0 V and capacitor charges towards final voltage V_{CC}.

When voltage across capacitor is $\frac{2}{3} V_{CC}$, output shifts to low.

Voltage across capacitor is given by the relation:

$$\frac{2}{3} V_{CC} = V_{CC}\left\{1 - e^{\frac{-t_W}{RC}}\right\}$$

$$\frac{2}{3} = 1 - e^{\frac{-t_W}{RC}}$$

$$e^{\frac{-t_W}{RC}} = 1 - \frac{2}{3} = \frac{1}{3}$$

On taking log on both sides;

$$\frac{T_W}{RC} \log e = \log\left(\frac{1}{3}\right)$$

$$\frac{T_W}{RC} = 1.1$$

$$T_W = 1.1\ RC$$

Hence, it is clear that the timer output remains high depending upon RC time constants. By proper selection of R and C, any timer delay can be obtained.

Ch 7 OPERATIONAL AMPLIFIER

IDEAL OPERATIONAL AMPLIFIER:- Ideal operational amplifier has following characteristics:

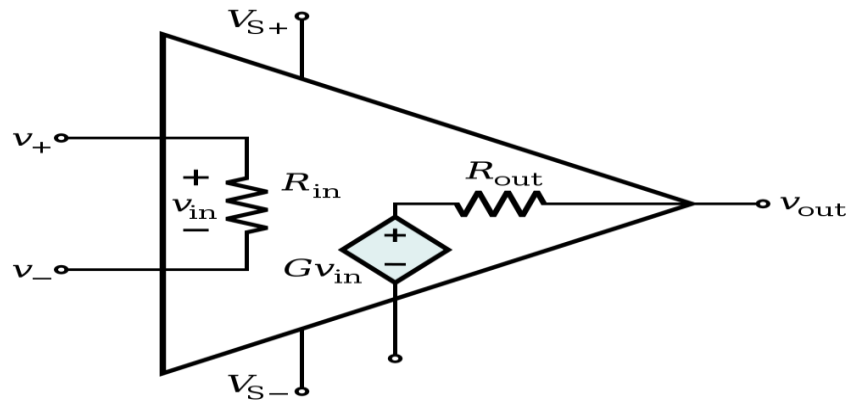

Ideal operation amplifier has following characteristics:

1. Infinite open loop gain.
2. Infinite input impedance.
3. Zero output resistance.
4. Infinite bandwidth.
5. Infinite slew rate i.e. output should respond simultaneously to variation in input.
6. Infinite common mode rejection ratio (CMRR).
7. Zero offset voltage.

The operational amplifier does not satisfy the characteristics of ideal operational amplifier. In practice operational amplifier has infinite gain, input impedance and bandwidth. However, some parameters may approach to ideal value, if negative feedback Is used in operational amplifiers.

BLOCK DIAGRAM OF OPERATIONAL AMPLIFIER:- Operational amplifier is direct-coupled high and gain amplifier. As shown in block diagrams, it consists of following stages:

1. Two stage differential amplifier.
2. Level transistor.
3. Push pull amplifier.

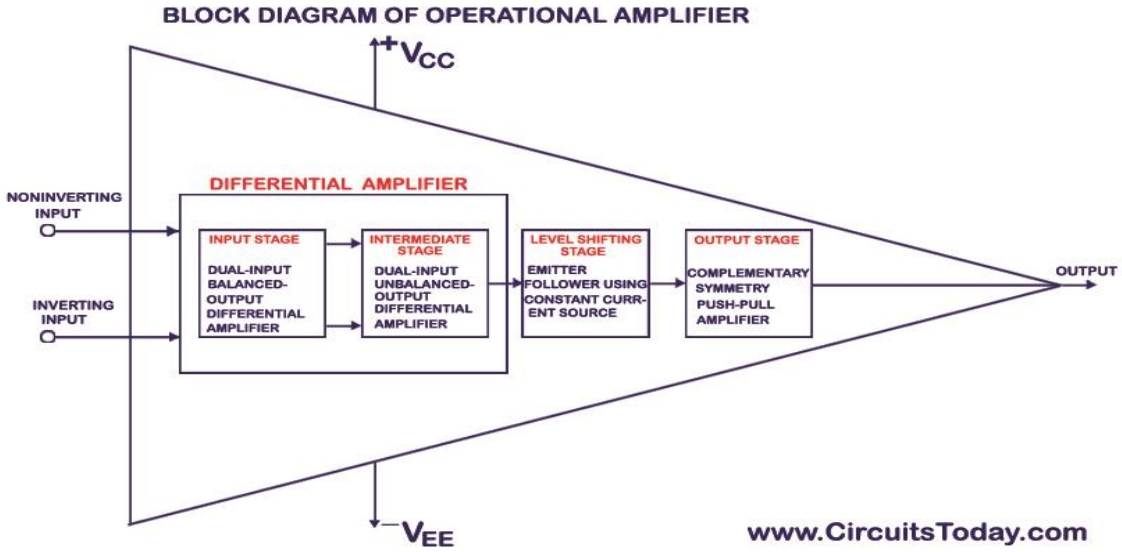

Fig. block diagram of operational amplifier

The operational amplifier has two inputs and one output. The output is amplifier by difference of two inputs i.e.

$$V_O = A(V_{in1} - V_{in2})$$

Where V_0 is output

V_{in} 1 is non-inverting input

V_{in2} is inverting input

A is open loop gain.

The input which causes output to shift in positive output is called non-inverting input whereas input which causes output to shift in negative output is called inverting input. The input stage of operational amplifier is dual input balanced output differential amplifier. It is high gain amplifier and output is directly coupled to second stage which is dual input and unbalanced output. As operational amplifier is direct coupled amplifier, dc voltage at output of second stage is well above ground. The next stage called translator shifts the dc level of second stage output to zero level. The last stage is complimentary push pull amplifier. This stage increases power level of signal and provides low resistance at output. Most of the operational amplifiers require power supply ranging from ± 9 V to ± 15 V. the input impedance of operational amplifier is very high in range of mega ohm. Its output resistance is of few hundred ohm. The gain of amplifier is very in the range of 10^5.

In most of the applications, operational amplifier is used with feedback configuration.

OPERATIONAL AMPLIFIER IC PACKAGE:- The operational amplifier is available in market in IC chip of 8 pins. There are number of companies manufacturing this IC. Most of the operational amplifier IC_S carry seven character code on its plastic case. The format of code is;

X_1 X_2 741X_3 X_4

First two digits identify manufacturer of IC. Table shows names of manufacturer and their identification code.

S.No.	Manufacturer	Code
1	Fairchild	uA
2	Motorola	MC
3	National semiconductor	LM
4	RCA	CA
5	signetics	NE/SE
6	Texas instruments	TL

Next three digits 741 indicate that IC is for operational amplifier. The fourth digit represents temperature range for which it is to be used. Table shows code for temperature and

Code	Application	Temperature
C	Commercial	0 to 70 ^{0}C
I	Industrial	-25 to 85 ^{0}C
M	Military	-55 to 125 ^{0}C

Last digit represents type of package. For plastic type, DIP code is D, for ceramic type, DIP code is J.

- There are 8 pins in a common Op-Amp, like the 741 which is used in many instructional courses.

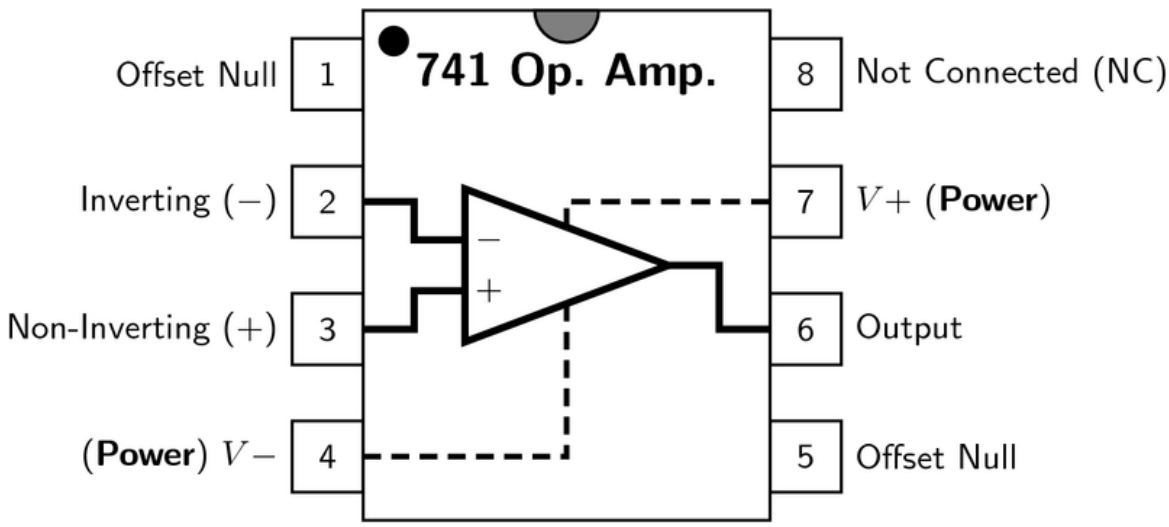

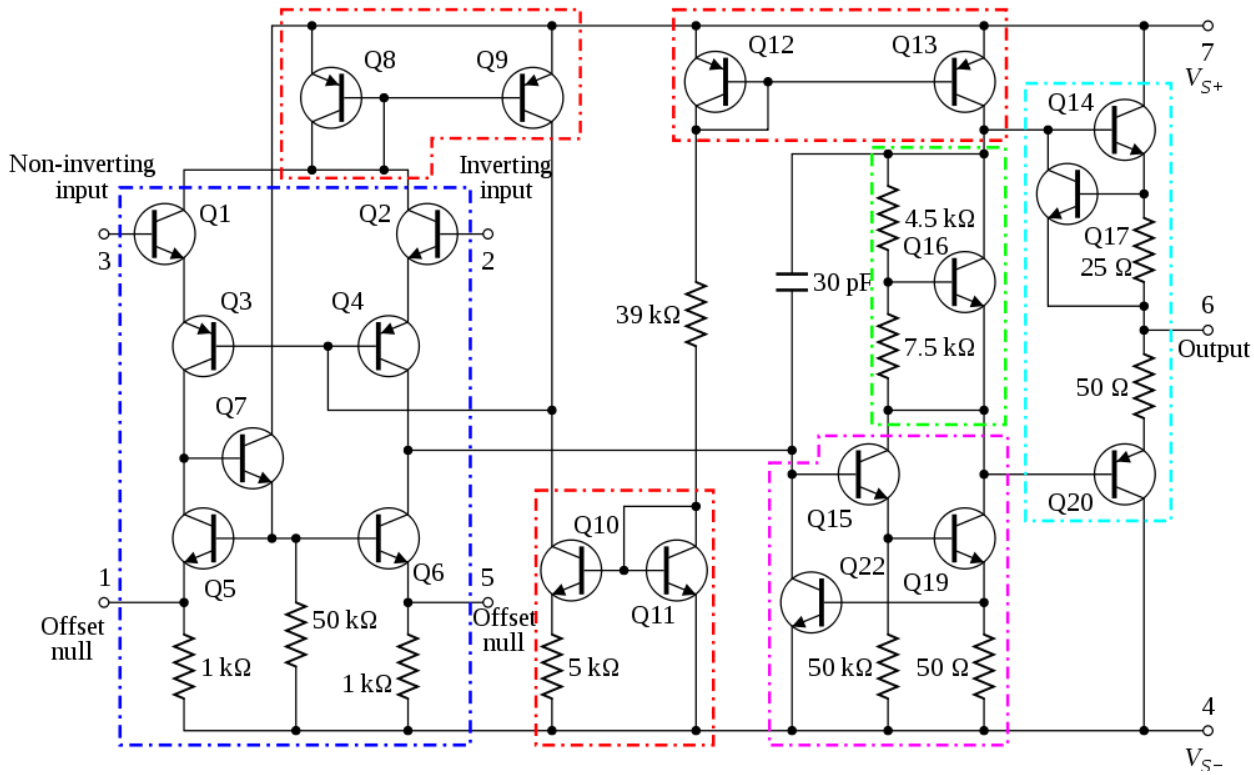

COMMON MODE REJECTION RATIO (CMRR):- The common mode rejection ratio is defined as the ratio of differential voltage gain of operational amplifier to its common mode voltage gain. Let,

A_d is differential voltage gain

A_{cm} is common mode gain

Then, as per definition;

$$CMRR = \frac{A_d}{A_m}$$

The differential gain of operational amplifier indicates number of times difference of two inputs is amplified. To measure A_d of amplifier, two input are not same. When both inputs of operational amplifier are connected to same voltage source, then it is said to be operating in common mode configuration fig. shows operational amplifier in common mode.

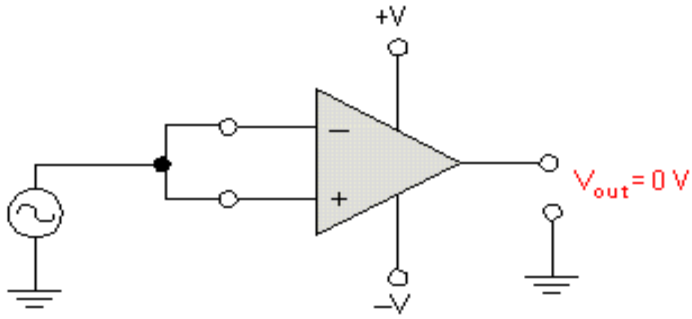

Fig. Common mode Amplifier

As input is same and operational amplifier gives output proportional to difference of input, the output should be zero i.e. its gain is zero. For ideal operational amplifier;

$$CMRR = \frac{A_d}{A_{cm}}$$

As, $A_{cm} = 0$

$CMRR = \infty$

But in actual practice due to imperfection with in operational amplifier or due to noise voltage at input terminals exist even when both inputs are same. Therefore, gain of amplifier in this condition is called common mode gain (A_{cm}).

i.e. $A_{cm} = \frac{V_0}{V_{in}}$

The value ot A_{cm} is small. Therefore, CMRR value is very large and is represented in decibel.

$$CMRR\ (db) = 20 \log \left[\frac{A_d}{A_{cm}}\right]$$

For operational amplifier, CMRR should be high. The higher the CMRR ratio, better will be the matching of two input terminals of an operational amplifier.

Example. An operational amplifier has open loop gain 10^5. Let common mode gain is 0.01. Determine CMRR and express it in decibel.

Solution: $CMRR = \frac{A_d}{A_{cm}} = \frac{10,0000}{0.01} = 10^7$

$(CMRR) = 20 \log 10^7 = 140$ dB Ans.

POWER SUPPLY REJECTION RATIO (PSRR):- The offset voltage in an operational amplifier changes with variations in power supply. The term PSRR indicates that how much offset voltage changes with per volt variation of supply voltage. It is expressed in microvolt per volt or in decibel.

$$PSRR = \frac{V_{io}}{V}$$

Where V_{io} is variation/change in offset voltage

And V is change in power supply.

When PSRR is measured in dB:

$$(PSRR)_{dB} = 20 \left[\log \frac{V_{io}}{V}\right] \quad dB$$

For better performance of an operational amplifier, the value of PSRR should be minimum or as low as possible. It is also known as Supply Voltage Rejection Ratio (SVRR).

SLEW RATE:- It is defined as maximum rate of change of output voltage with respect to time. It is expressed in volt/micro second. For and ideal operational amplifier, slew rate should be infinity so that output voltage changes simultaneously with the change in input. In data sheet of an operational amplifier, slew rate is given for unity gain. In practice, slew rate is not infinite. Its value should be as high as possible. To derive relation for slew rate in terms of frequency and amplitude of input waveform, let us consider that input is sine wave. To measure slew rate, gain of amplifier should be unity. Therefore, operational amplifiers are used as voltage follower.fig. shows circuit of an operational amplifier.

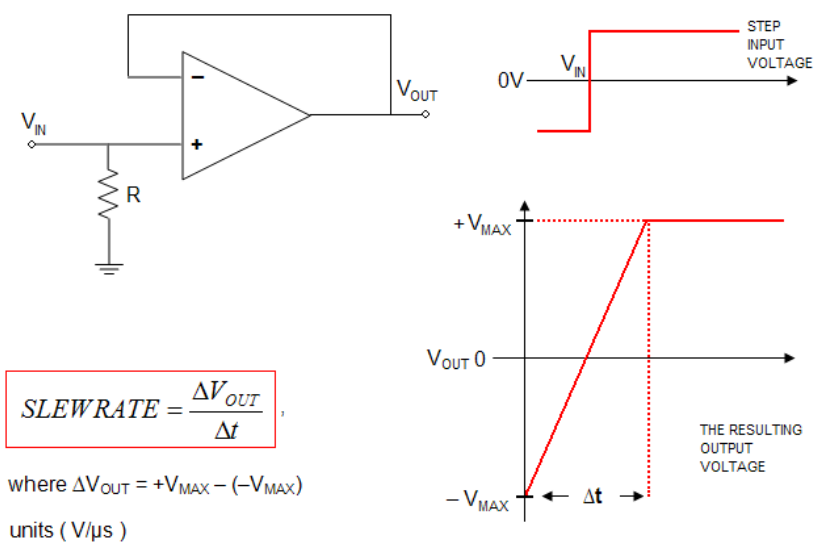

Fig. Slew Rate

Let $V_{in} = V_m \sin \omega t$

As gain is unity, ; $V_o = V_m \sin \omega t$

The rate of variation of output voltage is given by equation;

$$\frac{d v_O}{dt} = V_m \cos \omega t . \omega$$

As per definition, slew rate is maximum rate of change of output.

$$SR = \left[\frac{d V_o}{dt}\right]_{max}$$

$$= V_m \omega \text{ [maximum value of } \cos \omega t = 1]$$

As SR is measured in V/μ second. Therefore, equation is

$$SR = \frac{V_m \omega}{10^6} \text{ volt/micro second.}$$

Example; Find slew rate of an operational amplifier if peak input voltage is 10 V and frequency is 1 kHz.

Solution: slew rate = Maximum rate of change of output voltage

$$V_{in} = V_p \sin 2\pi ft$$

$$V_p = 10 \text{ V} \quad ; \quad f = 1 \text{ kHz}$$

To measure slew rate, an operational amplifier is connected as voltage follower. Therefore, gain is unity. The output voltage.

$$V_o = V_m = V_p \sin 2\pi f t$$

$$\frac{d V_O}{dt} = V_p \times 2 \pi f \cos 2\pi f t$$

$$\text{Slew rate} = \left(\frac{d V_o}{dt}\right)_{max} = V_p \times 2\pi f$$

Because maximum value of cos ωt = 1.

$$\text{Slew rate} = \frac{10 \times 2 \times \pi \times 1 \times 10^3}{10^6}$$

$$= \frac{6.28 \times 10^4}{10^6} = 0.06 \text{ V/μ second Ans.}$$

INPUT OFFSET VOLTAGE:- In operational amplifier, it is found that the output voltage exists even when no external voltage

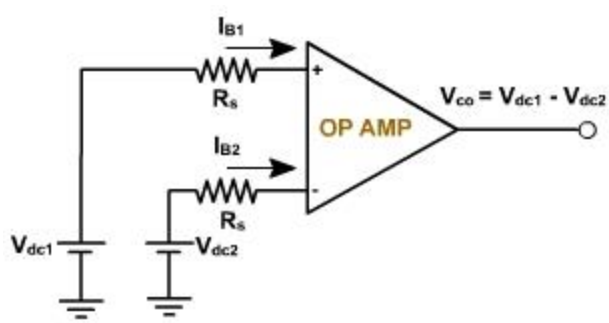

Fig. Input offset voltage

Source is connected to input terminals. To make output voltage zero, an external dc source as shown in fig. is connected. The term input offset voltage is actual difference between voltage applied at two inputs to make output zero.

$$|V_{io}| = |V_1 - V_2|$$

Where, V_{io} is input offset voltage.

V_1 is dc voltage at non inverting input.

V_2 is dc voltage at inverting input.

The input offset voltage can be positive or negative. But in data sheet of an operational amplifier, absolute value is listed. The offset voltage can be eliminated in an operational amplifier with following methods.

1. When operational amplifier is used in practice, offset voltage can be made zero by applying small dc voltage on one of the input terminals. This voltage is applied with potentiometer. The wiper of potentiometer is adjusted till output reaches zero.
2. In 741 series of operational amplifier, two pins 1 and 5 are used to make offset voltage zero. As shown in fig. a 10 kW potentiometer is connected between offset null pins 1 and 5 and wiper of the potentiometer is connected to negative supply. By varying wiper position, the output offset voltage can be reduced to zero volt.

INVERTING AMPLIFER:- When the input signal is employed at the inverting input terminal of an op-amplifier, then amplifier is called inverting operational amplifier.

Fig. shows operational amplifier as inverting amplifier

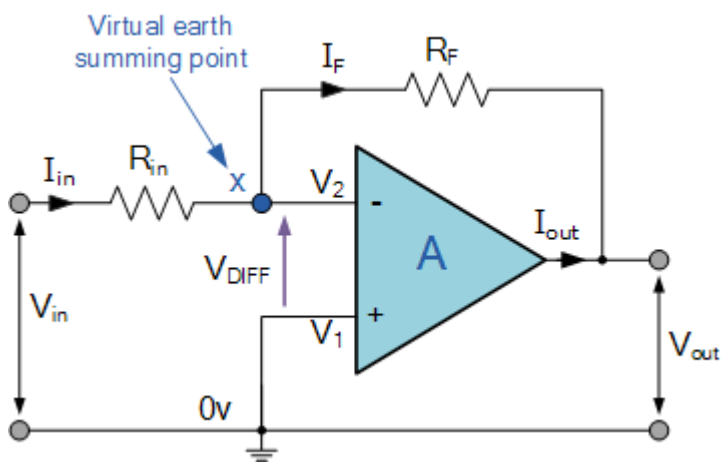

Fig. Operational amplifier as inverting amplifier

Let voltage source V_{in} of resistance R_{SI} is connected to inverting terminal. The source can be ac and dc. As source resistance is small, hence voltage drop across it is negligible. Therefore, voltage at inverting terminal is equal to

$$V_2 = =V_{in}$$

As non-inverting terminal is connected to ground.

Therefore, $V_1 = 0$

As operational amplifier amplifies difference of input signal, therefore the output voltage V_o is equal to

$$V_o = A(V_1 - V_2) = A(0-V_{in})$$

i.e. $V_o = -A\,V_{in}$

Negative sign indicated that output voltage is out of phase with input by 180°

Operational amplifiers can have infinite open-loop voltage gain allowing them to operate at their maximum amplification. However this very high open-loop gain causes the op-amp to become unstable so the gain is reduced to a more practical level by using negative feedback.

Negative feedback in electronics refers to taking a small part of the output signal from the amplifiers output and feeding it back either to aid or to oppose the input signal. Negative feedback means that the

returning signal has a phase that opposes the input signal and can significantly improve the performance of an operational amplifier.

Operational amplifiers can be connected into two basic configurations, **Inverting** and **Non-inverting**.

INVERTING AMPLIFIER

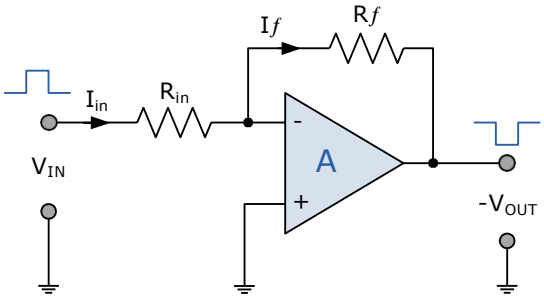

$$A_V = \frac{V_{OUT}}{V_{IN}} = -\frac{R_f}{R_{IN}}$$

$$V_{OUT} = -V_{IN} \left(\frac{R_f}{R_{IN}} \right)$$

$$Z_{IN} = R_{IN}$$

NON-INVERTING AMPLIFIER

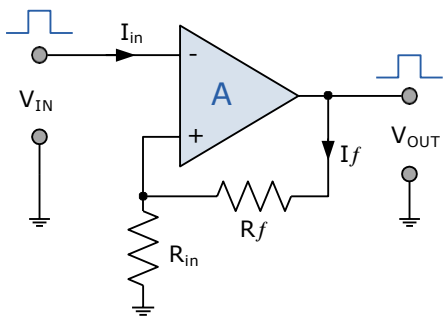

$$A_V = \frac{V_{OUT}}{V_{IN}} = 1 + \frac{R_f}{R_{IN}}$$

$$V_{OUT} = V_{IN} (A_V)$$

$$Z_{IN} = \infty$$

VOLTAGE FOLLOWER

By connecting the output directly back to the negative input terminal, 100% feedback is achieved resulting in a **Voltage Follower** (buffer) circuit with a constant gain of 1 (Unity).

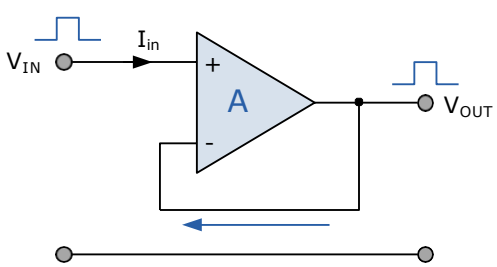

$V_{IN} = +V$, $V_{OUT} = -V$

$V_{OUT} = V_{IN}$

$$A_V = \frac{V_{OUT}}{V_{IN}} = 1$$

$$Z_{IN} = \infty$$

Op amps are used in a wide variety of applications and by adding more input resistors to either the inverting or non- inverting inputs, op-amp **Voltage Adders**, **Voltage Subtractors, Integrators and Differentiators** can be made.

DIFFERENTIAL AMPLIFIER (SUBTRACTOR)

The **Differential Amplifier** produces an output that is proportional to the difference between the 2 input voltages.

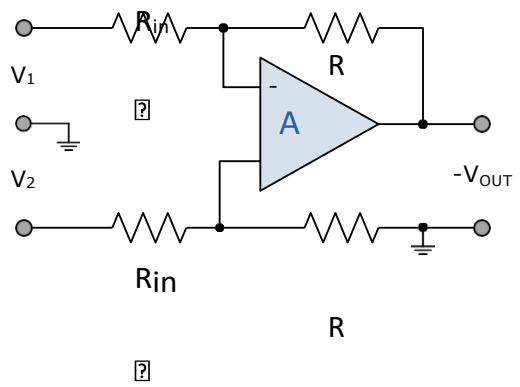

$$V_{OUT} = -\frac{R_f}{R_{IN}}(V_2 - V_1)$$

$$V_{OUT} = A(V_2 - V_1)$$

VOLTAGE SUMMING AMPLIFIER

Voltage Adders or **Summing Amplifiers** are made by adding more input resistors.

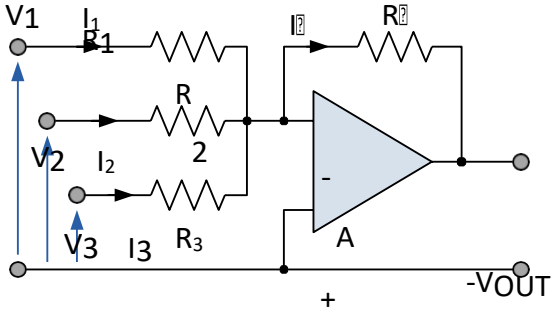

$$I_f = I_1 + I_2 + I_3 + \ldots$$

$$V_{OUT} = -\left(\frac{R_f}{R_1}V_1 + \frac{R_f}{R_2}V_2 + \frac{R_f}{R_3}V_3\right)$$

If $R_1 = R_2 = R_3$

$$V_{OUT} = -\frac{R_f}{R_{IN}}(V_1 + V_2 + V_3 + \ldots)$$

INTEGRATOR AMPLIFIER

The **Integrator Amplifier** produces an output that is the mathematical operation of integration.

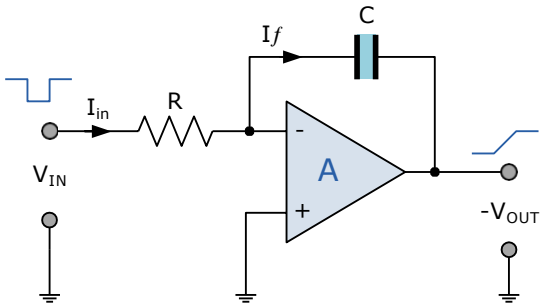

$$V_{OUT} = \frac{1}{2\pi f RC} V_{IN} \quad \text{and } \tau = RC$$

with a sinusoidal input

$$V_{OUT} = \frac{X_C}{R} = \frac{1}{2\pi f RC} \text{ or } \frac{1}{\omega RC}$$

$$\theta = 90^{o}$$

DIFFERENTIATOR AMPLIFIER

The **Differentiator Amplifier** produces an output that is the mathematical operation of differentiation.

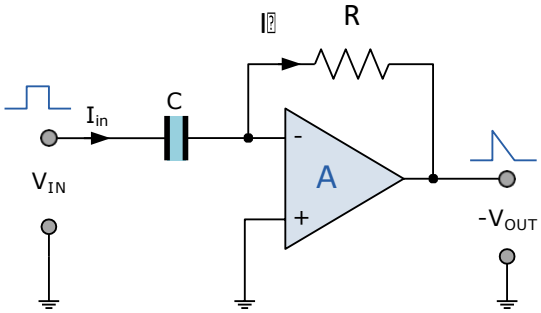

$$V_{OUT} = -\frac{dV_{IN}}{dt} RC \qquad \text{and} \qquad \tau = RC$$

with a sinusoidal input

$$V_{OUT} = \frac{R}{V_C} = \omega RC$$

$$\theta = -90^{o}$$

OPERATIONAL AMPLIFER AS INTEGRATOR:- As electronic circuit in which an operational amplifier is employed so that the output voltage comes out to be as an integration of the input voltage is called an operational-amplifier integrator.

The basic circuit of integrator in shown in fig. it is essentially an inverting amplifier where the feedback resistor is replaced by capacitor. Here, the voltage across the capacitor is proportional to the charge stored in it, which in turn is equal to the time integral of current $I = \frac{V_{in}}{R_1}$. Then output voltage is given as ;

$$V_{out} = \frac{-1}{R_1 C_F} \int V_{in}\, dt$$

Fig. shows circuit diagrams of an operational amplifier as integrator circuit>

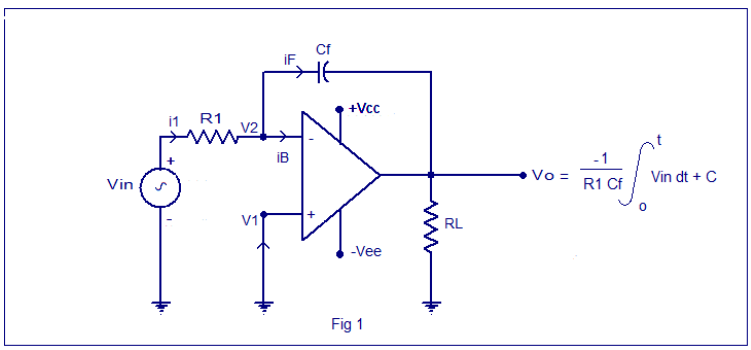

Fig. Operational amplifier as integrator

To derive relation for output voltage, apply Kirchoff's current law at node V_2.

Incoming current = outgoing current

$$I_1 = I_b + I_f$$

Since input impedance of amplifier is very high therefore.

$$I_b = o$$

Therefore $I_1 I_f$ or $I_1 = \frac{V_{in} - V_2}{R_1}$

$$I_f = \frac{C\, d\,(V_2 - V_o)}{dt}$$

since open loop gain A is high, therefore

$$V_1 - V_2 = \frac{V_o}{A} = 0$$

$$V_1 = V_2$$

As, $V_1 = 0$ so $V_2 = 0$

Putting values of I_1 and I_f in equation (i) and putting $V_2 = 0$;

The equation (i) becomes ; $\frac{V_{in}}{R_1} = -C_F \frac{d V_o}{dt}$

$$\frac{d V_O}{dt} = -\frac{1}{R_1 C_F} V_{in}$$

On taking integration on both sides ; $V_o = -\frac{1}{R_1 C_F} \int V_{in}\, dt$

The output V_o is proportional to integration of input $V_{in.}$ When square wave as shown in fig. is given at input terminal, the resultant output waveform will be triangular as shown.

Fig.

The output remains negative for entire duration because of negative sign in output voltage relation. For low frequency of input source, the capacitor is open and input offset voltage may cause error at output. To eliminate such error, the resistor R_F is connected parallel to capacitor C_F.

OPERATIONAL AMPLIFER AS DIFFERENTARITOR:- When an operational amplifier is used as differentiator amplifier, then output voltage is the derivative of input voltage. Fig. shows circuit of operational amplifier as differentiator.

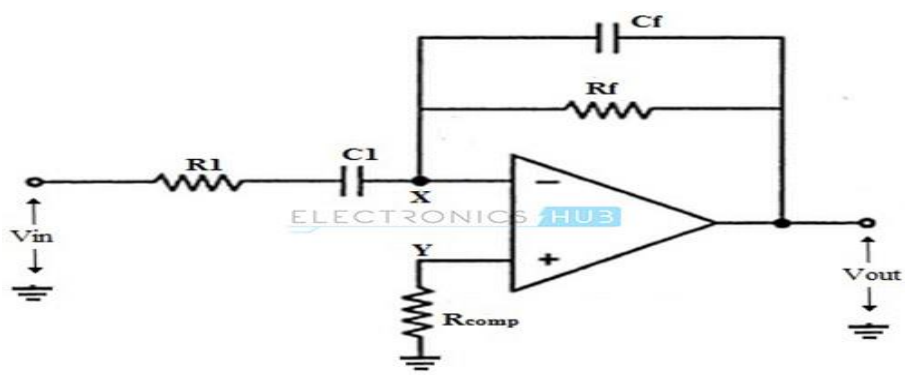

Fig: A Practical Op-amp Differentiator Circuit

To derive relation of output voltage, apply Kirchoff's current law at node V_2.

$$I_{in} = I_b + I_f$$

As input impedance of operational amplifier is high, therefore input current to operational amplifier is small and hence it can be neglected.

$$I_{in} = I_f$$

$$C_1 \frac{d (V_{in} - V_2)}{dt} = \frac{V_2 - V_o}{R_F}$$

since gain A is large, hence

$$V_1 - V_2 = \frac{V}{A} = 0$$

$$V_1 = V_2$$

As $V_1 = 0$ so $V_2 = 0$

Putting value of V_2 in equation (ii); we get

$$C_1 \frac{d}{dt} V_{in} = -\frac{V_o}{R_F}$$

$$V_o = -R_F C_1 \frac{d V_{in}}{dt}$$

Therefore output of circuit is the derivative of input. When input is sine wave, then output will be casing wave. Fig. shows input and output waveform.

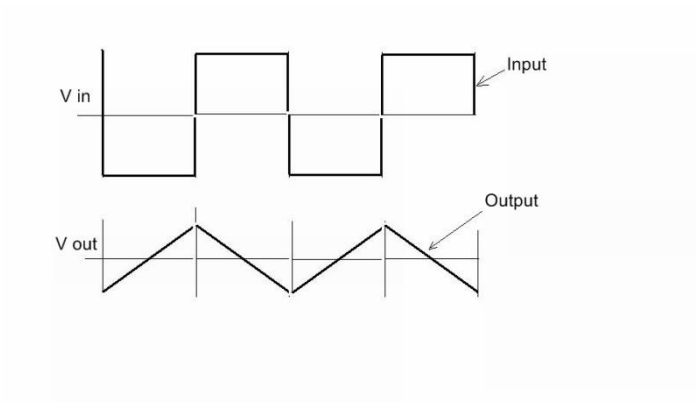

Fig.

The circuit as shown in fig. has practical problem that gain i.e. $\frac{R_F}{X_{C1}}$ of circuit changes with Frequency. As frequency increases, gain also increases. This causes circuit unstability. The input impedance also decreases with frequency. These two problems can be overcome by using resistor R_1 in series with capacitor C_1.

Ch 8 REGULATED DC POWER SUPPLIES

DC POWER SUPPLY:- A dc power supply that maintains the output voltage constant irrespective of the fluctuations in ac mains or variations in load is known as a regulated power supply.

A regulated power supply generally consists of a step down transformer, rectifier circuit, filter circuit and some voltage regulating device connected to the output. The block diagram of a regulated power supply is as shown in fig.

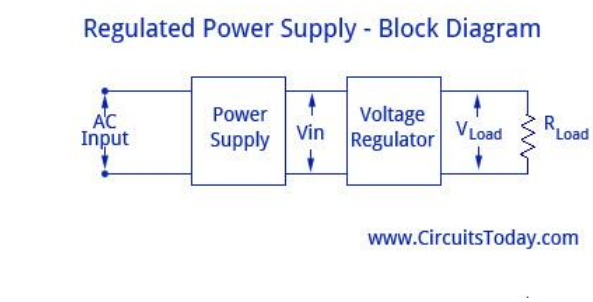

Fig. Regulated Power Supply

The above block diagram can be drawn as a circuit diagram using bridge rectifier and a zener diode voltage regulator as shown in fig.

The function of each block/section of the regulated power supply is as described below :

(a) Transformer: Usually in most of electronic circuits d.c. voltage requirements for operation of various electronic equipments is quite less, 3 to 24 volt. This voltage is very small as compared to that obtained from the main ac line. A step down transformer is used for this purpose before rectification to get the voltage of required value. The transformer consists of two windings. The primary winding is connected to AC 220 V and the required ac voltage is obtained from secondary winding. It works on the principle of electromagnetic induction.

(b) Rectifier: Usually, a bridge rectifier is used to convert the ac into pulsating dc, the rectifier employed is usually a bridge rectifier due its advantages over any other type of rectifiers. Thus, the output of the rectifier is pulsating dc.

(c) Filter: Usually, a π-filter comprising of capacitors and an inductor is used to for filtration of the rectifier output. Filter is used to remove the ripples from the output of rectifier and to smooth it out. The dc output at the filter output is dependent upon the ac mains and applied load. Variation in any of the two results in variation of the output. Generally, a voltage regulator is employed at the filter output.

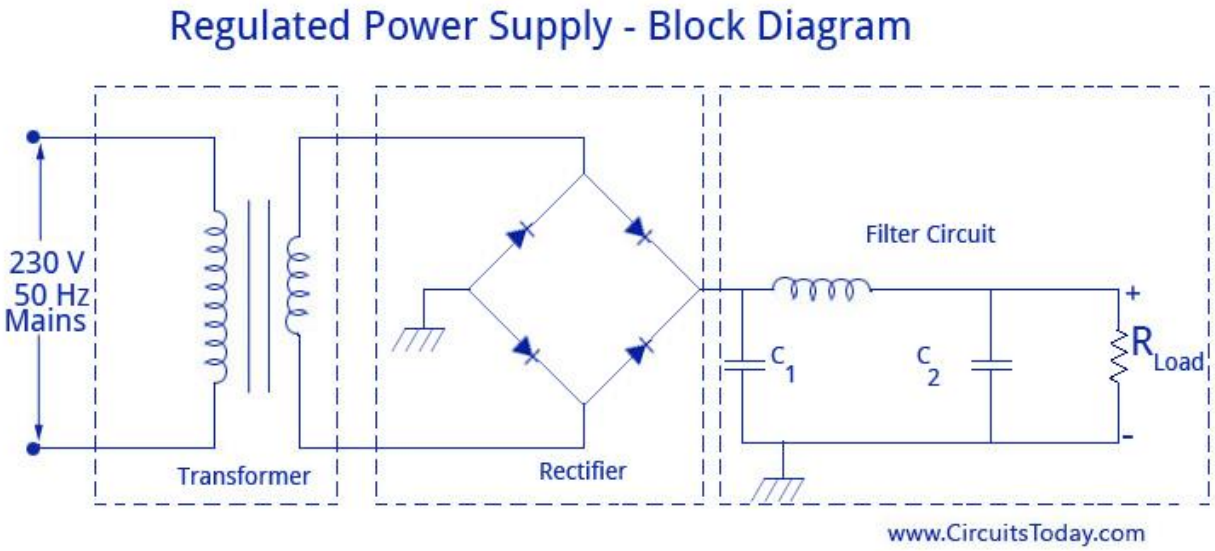

Fig. Voltage Regulator

(d) Voltage regulator: Usually, zener or a 78 X X or 79 X X series IC voltage regulator is employed that keeps the dc output voltage constant even if there is variation in ac main or the load.

LINE REGULATION:- fig. shows a bridge rectifier with a capacitor input filter. Changing the load resistance will change the load voltage.

Fig.

Decrease in load resistance will result in increase in load current and will decrease the load voltage. Voltage or load regulation indicated how much the load voltage changes with changes in load current.

i.e. Voltage regulation $= \frac{V_{NL} - V_{FL}}{V_{FL}} \times 100\%$

Where V_{NL} = Load voltage with no load current

V_{FL} = Load voltage with full load current.

Thus, voltage regulation may be defined as the change in dc output voltage from no load to full load voltage of a power supply.

The smaller the load regulation, the better is the power supply. For instance, a well-regulated power supply can have a load regulation of less than 1 percent. This means that the load voltage varies less than 1 percent over the full range of load current.

LINE REGULATION:- In fig shown the input line voltage has nominal value of 220 V. the actual voltage coming out of a power outlet may vary from 205 to 230 V rms, depending upon the time of day, the locality and other factors. Since the secondary voltage is directly proportional to the line voltage, the load voltage in fig. will change when line voltage changes.

i.e. Line regulation $= \frac{V_{HL} - V_{LL}}{V_{LL}} \times 100\%$

Where V_{HL} = Load voltage with high line

V_{LL} = Load voltage with low line

Thus, line regulation may be defined as the change in load voltage from high input line voltage to low input line voltage w.r.t. load voltage with low input line voltage.

FIXED VOLTAGE REGUALTOR:- The fixed voltage regulator provides fixed constant voltage at output. This voltage remains constant inspite of changes in load and supply voltage. The performance of regulator is measured in terms or parameters such as line regulation and voltage regulation. There are two type of fixed voltage regulators.

(i) Positive voltage regulator

(ii) Negative voltage regulator.

(i) Positive voltage regulator: This type of regulator provides fixed positive voltage. These regulator are available in market with different voltage ratings. For example, 78XX series is widely used positive regulator IC. It is three

pin IC namely input, common and output. Fig. shows a voltage regulator and its application connections.

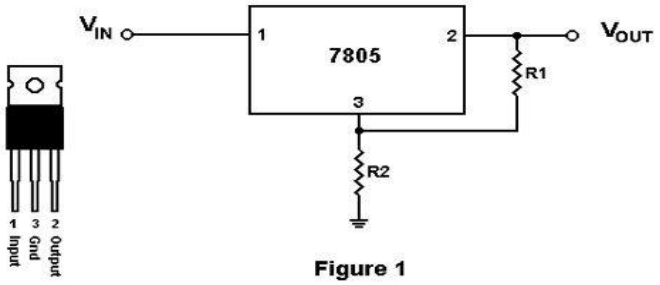

Figure 1

The voltage to be regulated is applied at pin number 1 and regulated voltage is available at pin 3. The pin 2 is common and connected to ground. When regulator is used in circuit, in most of applications a bypass capacitor is connected between input and common and similarly between output and common.

When regulator is located in circuit at few distance from filter circuit, the inductance of connecting wire may produce oscillations. The capacitor C_i bypass all such oscillations. The capacitor C_o is used to improve transits response of regulated output voltage. The valued of C_i and C_o is provided in data manual of voltage regulator IC.

Any 78XX series regulator has drop output voltage 2 to 3 V, which is difference in input and output voltage. This means that IC can regulate dc voltage if V_{in} is 2 to 3 V more than output voltage. If input voltage exceeds this limits, then IC stops regulating the voltage.

The 78XX series IC can handle 1 ampere of load current if proper heat sink is used. The 78XX series IC has inbuilt thermal and current protection circuit. when temperature of IC increases beyond limit of current exceed due to short circuit, the inbuilt protection circuit turn off the regulator. The 78XX series is available in seven voltage option. The 7805 produces output +5 V, 7806 produces +6 V, 7808 produces + 8 V, 7812 produces +12 V, 7815 produces + 15 V, 7818 produces + 18 V, 7824 produces + 24 V. The input voltage range is 8 to 35 volt. The data sheet of 78 X X series gives maximum and minimum voltage for fixed output regular IC. The performance parameters of voltage regulator are ;

1. Line regulation
2. Load regulation
3. Temperature stability
4. Ripple rejection

The value of parameter for 78 X X series is specified in date sheet of regulator.

(ii) **Negative voltage regulator**: This type of regulator provides fixed negative dc voltage at output terminal. For negative voltage regulator, the IC series is 79 X X . The regulators are available for voltage -5, -6, -8, -12, -15, -18, -24 volt. This is three terminal IC. Pin 1 is ground pin 2 is input, pin 3 is output. Fig. shows 79 X X IC.

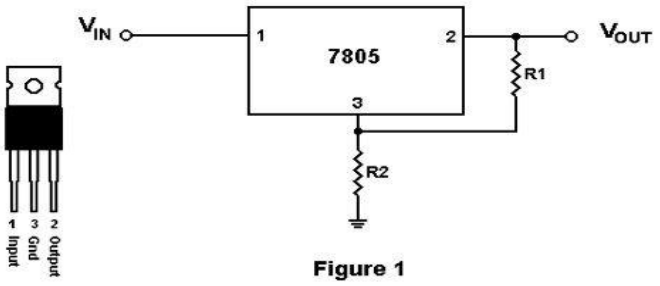

7805 is replaced with 7905

Fig

The voltage regulator 79 X X can provide 1 A load current if proper heat sink is used. The 79 X X series is similar to 78 X X series. 79 X X series also include thermal and current protection circuit, which protects the IC from over heating. It is used in similar way as that of 78 X X series. The performances are line regulation, load ripple rejection and temperature stability.

Lab Manual

APPLICATIONS OF OP-AMP

AIM:

To demonstrate the use of op-amp as (1) summing amplifier (2) subtractor (3) zero crossing detector and (4) voltage comparator.

APPARATUS REQUIRED:

S.No.	APPARATUS	TYPE	RANGE	QUANTITY
1)	Op-Amp	µA741		1

2)	**Resistors**		**10K, 1K**	**1**
4)	**Signal Generator**			**1**
5)	**CRO**			**1**
6)	**Dual power supply**			**1**
7)	**Bread Board**			**1**
8)	**Connecting wires**			

THEORY:

Summing Amplifier: Op-amp may be used to perform summing operation of several input signals in inverting in inverting and non-inverting mode. The input signals to be summed up are given to inverting terminal or non-inverting terminal through the input resistance to perform inverting and non-inverting summing operations respectively.

Subtractor: The basic difference amplifier can be used as a subtractor. The signals to be subtracted are connected to opposite polarity inputs i.e. in inverting or non-inverting terminals of the op-amp.

Voltage Comparator: A comparator is a circuit which compares a signal voltage

applied at one input of an op-amp with output $\pm V_{sat} = (V_{cc})$. If the signal is applied to the inverting terminal of the op-amp it is called inverting comparator and if the signal is

applied to non-inverting terminal of the op-amp it is called non-inverting comparator. In an inverting comparator if input signal is less than reference voltage, output will be $+V_{sat}$. When input signal voltage is greater than reference voltage output will be $-V_{sat}$. The vice-versa takes place in non-inverting comparator.

Zero Crossing Detector: Zero crossing comparator (ZCD) is an application of voltage comparator. It converts any time varying signal to square of same time period with amplitude $\pm V_{sat}$. The reference voltage is set as zero volts. When the polarity of the input signal changes, output square wave changes polarity.

Integrator: Integrator is used to integrate the i/p waveform. i.e; $V_O = \int V_{in}\, dt$. Here in the inverting amplifier configuration, the feedback resistor R_f is replaced by

capacitor C_f. Integrators are commonly used in wave shaping n/ws, signal generators etc. For proper wave integration, T >> RC. Gain and linearity of the o/p are two advantages

of op-amp integrators. Linearity is due to linear charging of capacitor. Its limitation is for Vin=0 and for low frequencies, $X_{Cf} = \infty$ or the capacitor C_f acts as an open circuit. Therefore the op-amp integrator works as an open loop amplifier and the gain becomes infinity or very high.

Differentiator: Here the output waveform is the derivative of the i/p waveform. In a basic inverting amplifier, if R_1 is replaced by C_1, we get the differentiator. But at high frequencies, the gain of the circuit (Rf/XC1) increases with increase in frequency at the rate of 20dB/decade. This makes the circuit unstable. Also X_{C1} decreases when frequency increases.

PROCEDURE:

a) Inverting summing amplifier:

1. Connect the circuit as shown in figure
2. Connect batteries for voltage V_1, V_2.
3. Measure and note the output voltage and compare it with theoretical value $Vo = -(R_f / R_i)(V_1+V_2)$

b) Subtractor:

4. Connect the circuit as shown in figure
5. Measure and note the output voltage and compare it with theoretical value.

c) Voltage comparator:

6. Connect the circuit as shown in the figure
7. Connect an alternating waveform to the non-inverting input of the op-amp
8. Connect a reference voltage source to inverting input of the op-amp
9. Plot the input and output waveform.

d) Zero crossing detector:

10. Connect the circuit as shown in figure
11. Connect the input to a signal generator generating a sin wave with one volt peak to peak at 1kHz.
12. Connect the input and output to dual channel CRO and compare the input and output.
13. Plot the input and output waveform in a graph.

e) Integrator & Differentiator:

1. Connections are made as per the diagram.

2. Apply an i/p voltage of 1-2Vpp with 1kHz frequency and check the waveform on the CRO.

3. Measure the value of V_O by varying the frequency of the i/p signal.
4. Calculate gain using the formulae 20 log (V_O /V_{IN}).

PIN DIAGRAM:

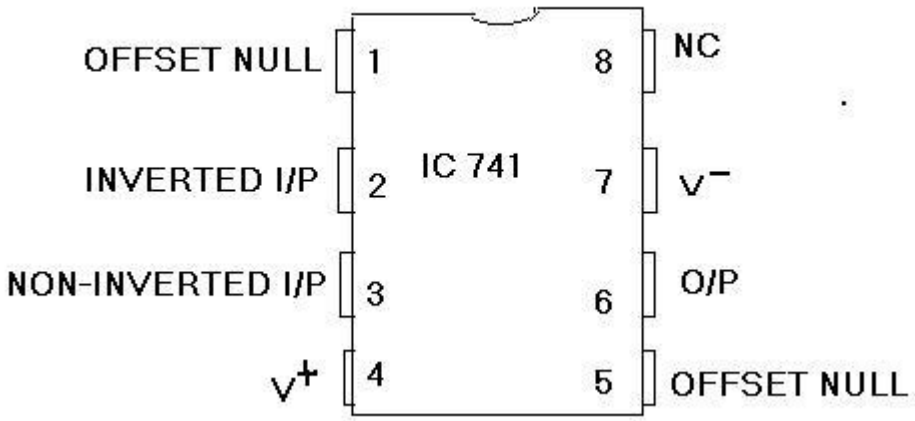

CIRCUIT DIAGRAM:

Summing Amplifier:

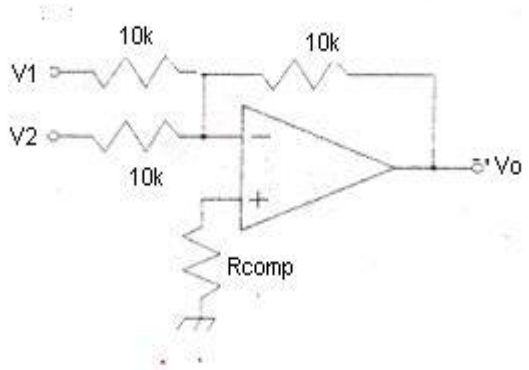

S.No.	V1	V2	Theoretical V0=V1+V2	Practical V0
1.	5	3.4	8.4	8.5
2.	10	10	20	21.8

Subtractor:

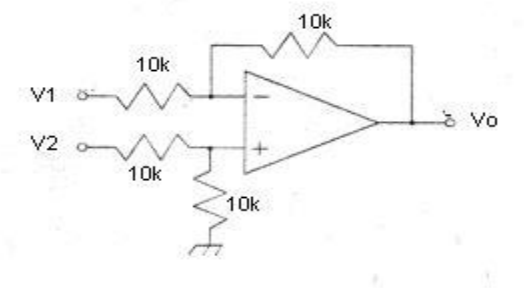

S.No.	V1	V2	Theoretical V0=V1-V2	Practical V0
1.	10	7	3	3.003
2.	10	12	-2	-2.01

Voltage Comparator:

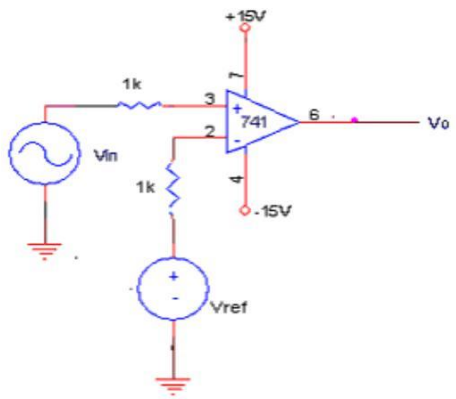

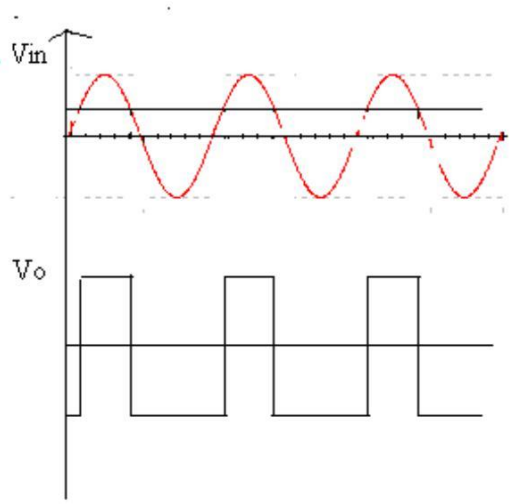

Zero Crossing Detector:

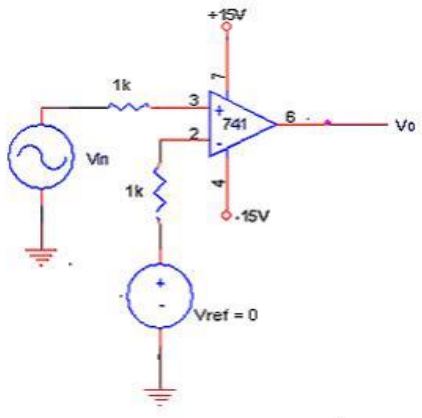

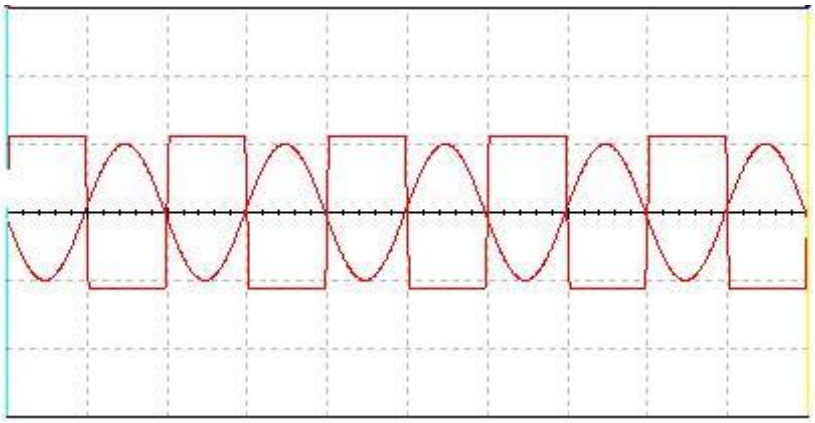

Integrator:

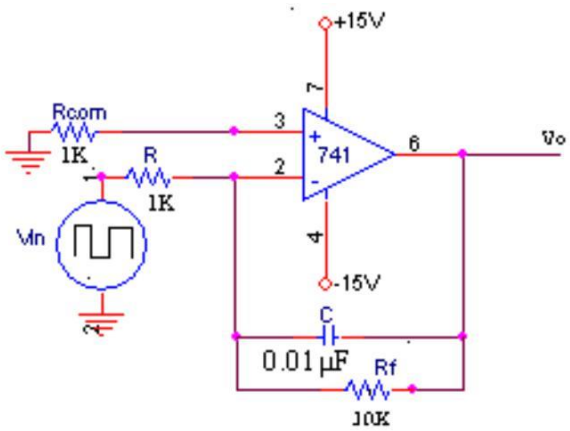

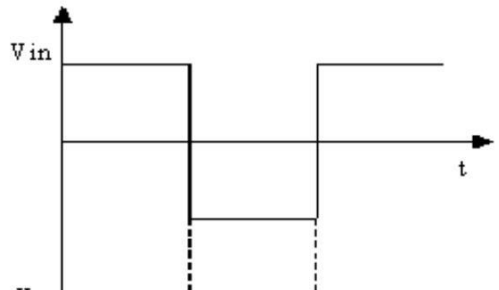

Differentiator:

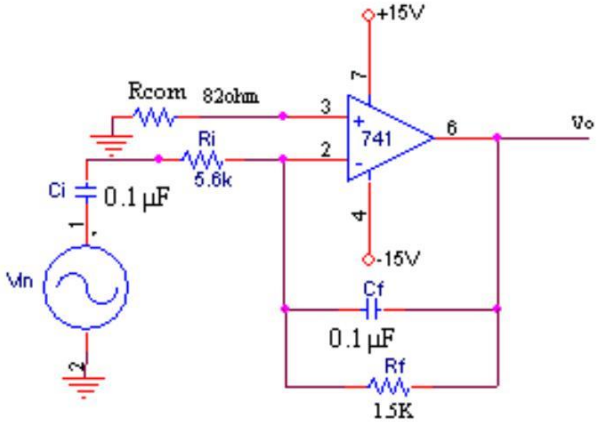

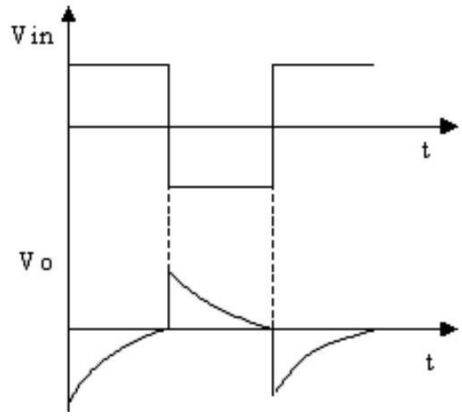

RESULT:

Thus, the use of op-amp as summing amplifier, subtractor, voltage comparator, zero crossing detector, integrator, differentiator was studied.

Post Lab Questions:

1. State some applications of integrator.

a) Analog computers
b) ADC
c) Signal wave shaping circuits.

2. What are the characteristics of Comparator?

a) Speed of operation
b) Accuracy
c) Compatibility of the output.

3. List some applications of comparator.

a) Window detector
b) Time marker generator
c) Phase meter
d) Zero crossing detector

4. What are the modes in which op-amp is operated with finite gain and infinite gain?

Open loop mode with infinite gain: Comparator

Closed loop mode with finite gain: Amplifier

6. Waveform generation circuits

Pre Lab Questions:

1. What is the basic difference between comparator and Schmitt trigger?

A comparator compares the input signal with reference voltage and gives the output whereas Schmitt trigger operates between two reference points LTP and UTP.

2. State barkhausen criterion.

a) Magnitude, $|A_v \beta| = 1$

b) Phase, $\angle A_v \beta = 0$

4. **What is the merit of regenerative comparator?**

In regenerative comparator, the feedback enhances the comparator input. The phase difference is not visualized due to positive feedback.

4. What is an oscillator?

An oscillator is basically a positive feedback circuit where a fraction of output voltage Vo is fed back to the input end of the basic amplifier, which is in phase with the signal to the basic amplifier.

5. Design a Wein bridge oscillator for a frequency of 1KHz.

f = 1/2 Π RC
C = 0.1 μF
R = 1/2 Π fC

= 1/(2*3.14*1*10^3*0.1*10^-6)
= 628 Ω

6. WAVEFORM GENERATING CIRCUITS

AIM:

To design a schmitt trigger a wien bridge oscillator and to study their operation.

APPARATUS REQUIRED:

S.No.	APPARATUS	TYPE	RANGE	QUANTITY
1)	Op-Amp	µA741		1
2)	Resistors		29K, 1K, 16K, 1.6K	1
3)	Capacitors		0.1µF	1
4)	Signal Generator			1
5)	CRO			1
6)	Dual power supply			1
7)	Bread Board			1
8)	Connecting wires			

THEORY:

Schmitt Trigger

Schmitt trigger is otherwise called regenerative comparator. In this comparator circuit a positive feedback is added. The input voltage Vi triggers the output Vo very time

it exceeds certain voltage levels. These voltages are known as upper threshold voltage (V_{UT}) and lower threshold voltage V_{LT} . The difference between

There two threshold voltages ($V_{UT} – V_{LT}$) gives the hysteresis width.

$$V_{UT} = V_{ref} + (R_2 / (R_1 + R_2) * (V_{sat} – V_{ref})$$

V_{ref} - applied reference voltage

V_{sat} - saturation voltage of OP-AMP

R_1, R_2 - Voltage divider resistances

$$V_{LT} = V_{ref} – (R_2 / (R_1 + R_2) * (V_{sat} – V_{ref})$$

When input voltage is greater than V_{UT} , output goes to negative saturation and when input voltage is less than V_{LT} , output goes to positive saturation.

Wien bridge Oscillator:

Wien bridge oscillator is one of the most commonly used audio frequency oscillator owing to its simplicity and stability. Wien bridge circuit is connected between the amplifier input terminals and output terminals. The bridge has a series RC network in

one arm and a parallel RC network in the adjoining arm. In the remaining two arms of the bridge, resistors R_1 and R_f are connected. The phase angle criterion for oscillation is that the total phase shift around the circuit must be 0° .This conditions occurs only when the bridge is balanced, that is, at resonance. The frequency of oscillation is exactly the resonant frequency of the balanced Wien bridge.

Design of wien bridge oscillator

$$fo = \frac{1}{2\pi RC} = \frac{0.159}{RC} \Rightarrow (A)$$

Assuming that the resisters are equal in value, and capacitors are equal in value in the reactive leg of the wien bridge. At this frequency the gain required for substained oscillation is given by

Ao -> gain g the op-amp

β -> feed back factor 1

Ao = 3

$$\frac{1+Rf}{R} = 3$$

$$\frac{R_1 + R_f}{R_1} = 3$$

$R_1 + R_f = 3R_1$, $R_f = 2R_1$

Design of Schmitt trigger

Given V_{UT} = 0.5V V_{LT} = -0.5V

$$V_{UT} = \frac{R_2}{R_1 + R_2} V_{sat}$$

$$V_{LT} = \frac{R_2}{R_1 + R_2} (-V_{sat})$$

Taking ± V_{sat} = ± 15V,

$$0.5 = \frac{R_2}{R_1 + R_2} (15V)$$

$$\frac{R_2}{R_1 + R_2} = 30$$

$$\frac{R_2 = 29}{R_2}$$

$= R_1 = 29R_2$

Taking $R_2 = 1K\Omega$

$R_1 = 29K\Omega$ (set using 100K POT)

PROCEDURE:

a) Schmitt trigger:

1. Connect the circuit as shown in diagram
2. See the input sine wave and output from pin.6 in a dual channel, CRO
3. Plot the observed waveforms in a linear graph.
4. Calculate the lower threshold voltage and upper threshold voltage from the plotted graph.
5. Calculate the lower threshold voltage and upper threshold voltage theoretically using the formula.

b) Wien bridge Oscillator:

1. Design the oscillator for desired frequency using equations
2. Connect the circuit as per the circuit diagram in figure
3. Connect the output of the oscillator to CRO
4. Adjust the POT Rf in feedback loop so that the output is a sine wave.
5. Plot the output in a graph.

PIN DIAGRAM:

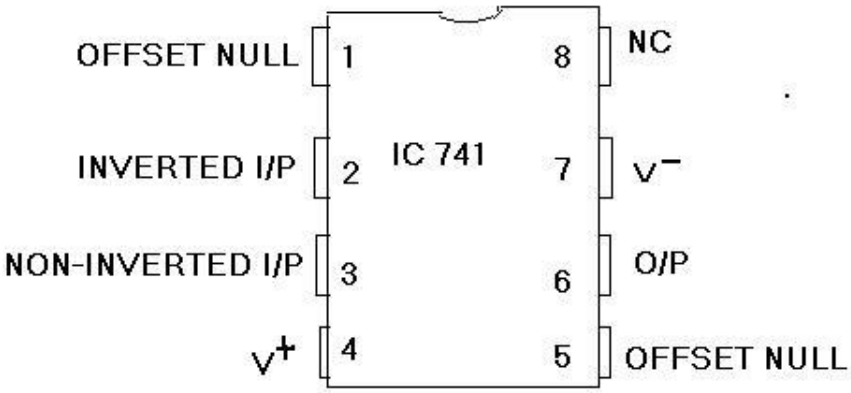

CIRCUIT DIAGRAM:

a) **Schmitt Trigger:**

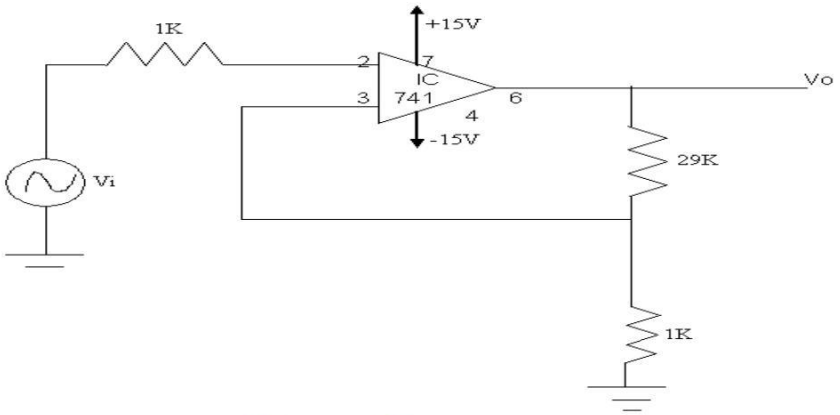

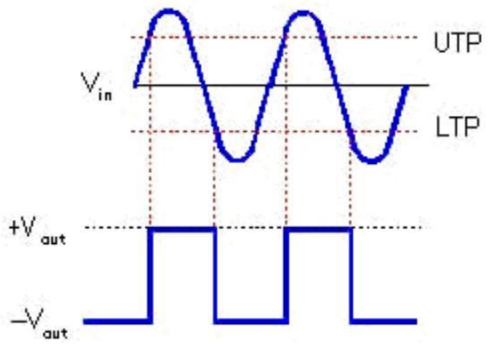

S.No:	INPUT		OUTPUT	
	Vin (V)	Time (msec)	Vout(V)	Time (msec)
1.	20	20	28	20

b) Wien Bridge Oscillator:

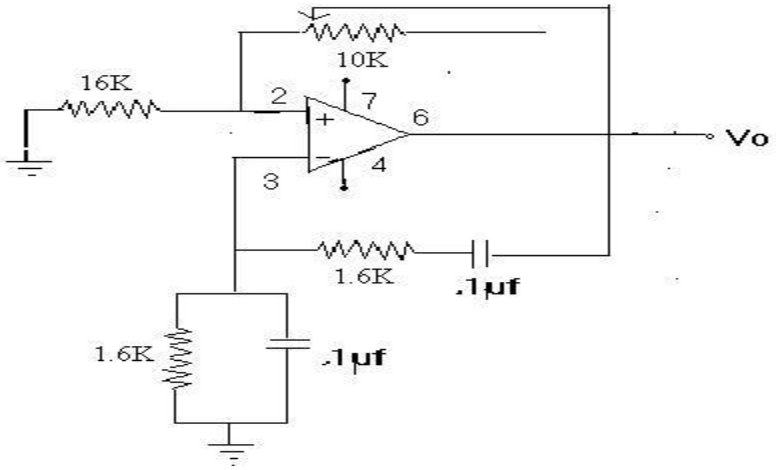

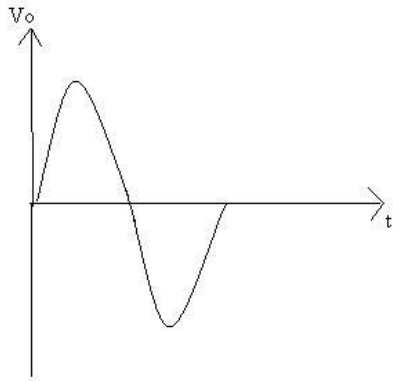

S.No:	OUTPUT		Theoretical Frequency(Hz)	Practical Frequency(Hz)
	Vin (V)	Time (msec)		
1.	20	0.6	1.5K	1.7K

RESULT:

Thus Schmitt trigger and Wien bridge oscillator were designed and their operations were studied.

Post Lab Questions:

1. How can you obtain triangular wave using schmitt trigger?

The output of Schmitt trigger when connected to integrator yields triangular output.

2. Wein bridge oscillator uses positive and negative feedback. Why?

Negative feedback is used for stability gain positive feedback is used for oscillation

3. What is the function of lead-lag network in Wein bridge oscillator?

The function of lag lead network is to obtain the zero degree phase shift.

4. Why Schmitt trigger is called regenerative comparator?

The reference voltages LTP andUTP are regenerated depending on the output voltages +Vsat and –Vsat.

5. What is hysteresis voltage in Schmitt trigger?

The difference in voltage between lower and upper threshold voltage is called hysteresis voltage**.**

DEPT. OF ELECTRICAL & ELECTRONICS ENGINEERING

SRM UNIVERSITY, Kattankulathur – 603203.

Title of Experiment :	
Name of the candidate :	
Register Number :	
Date of Experiment :	
Date of submission :	

S.No:	Marks split up	Maximum Marks (50)	Marks Obtained
1	Attendance	5	
2	Preparation of observation/record	10	
3	Pre viva questions	5	
4	Execution of experiment	15	
5	Calculation/evaluation of result	10	
6	Post viva questions	5	

9. 555 Timer

Pre Lab Questions:

1. Give th pin diagram of 555 timer IC.

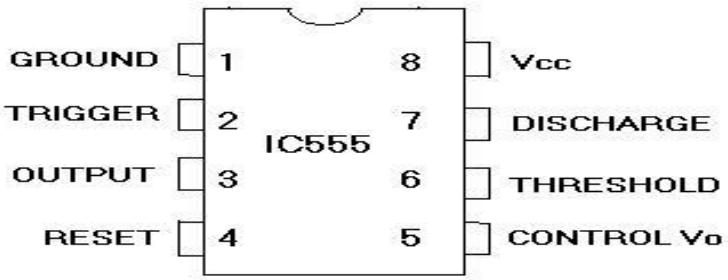

2. What is multivibrator?

A multivibrator is an electronic circuit used to implement a variety of simple two-state systems such as oscillators, timers and flip-flops. It is characterized by two amplifying devices (transistors, electron tubes or other devices) cross-coupled by resistors or capacitors.

3. What is quasi stable state?

Change from one state to another without any external trigger is termed as quasi stable state.

4. What are the various modes of operation of multivibrator? Explain

Astable mode – 2 quasi stable state
Monostable – 1 quasi and on stable
state. Bistable – 2 stable states.

5. What is one-shot multivibrator?

The monostable is also called as one-shot multivibrator as it produces a single pulse of specified duration in response to each external trigger signal. Only one stable state exists. When an external trigger signal is applied the output changes its state.

9. ASTABLE MULTIVIBRATOR

AIM:

To study the application of IC555 as an astable multivibrator.

APPARATUS REQUIRED *:*

S.NO	APPARATUS	RANGE	QUANTITY
1)	IC	NE555	1
2)	Resistor	1KΩ, 2.2KΩ	1
3)	Capacitor	0.1μF, 0.01μF	1
4)	CRO	-	1
5)	RPS	DUAL(0-30) V	1
6)	Connecting Wires		

THEORY:

The IC555 timer is a 8 pin IC that can be connected to external components for astable operation. The simplified block diagram is drawn. The OP-AMP has threshold and control inputs. Whenever the threshold voltage exceeds the control voltage, the high output from the OP –AMP will set the flip-flop. The collector of discharge transistor goes to pin 7. When this pin is connected to an external trimming capacitor, a high Q output from the flip flop will saturate the transistor and discharge the capacitor.

When Q is low the transistor opens and the capacitor charges. The complementary signal out of the flip-flop goes to pin 3 and output. When external reset pin is grounded it inhibits the device. The on – off feature is useful in many application. The lower OP-AMP inverting terminal input is called the trigger because of the voltage divider. The non-inverting input has a voltage of +Vcc/3, the OP-Amp output goes high and resets the flip flop.

The output frequency is,

$$f = 1.44/(R_A + R_B)C$$

The duty cycle is,

$$D = R_B / (R_A + 2R_B) * 100\%$$

The duty cycle is between 50 to 100% depending on R_A and R_B.

PROCEDURE:

1. The connections are made as per the circuit diagram and the values of R and C are calculated assuming anyone term.

2. The output waveform is noted down and graph is drawn and also the theoretical and practical time period is verified.

PIN DIAGRAM:

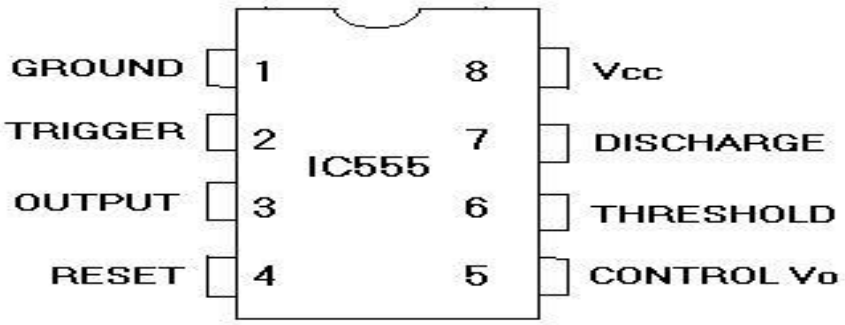

CIRCUIT DIAGRAM:

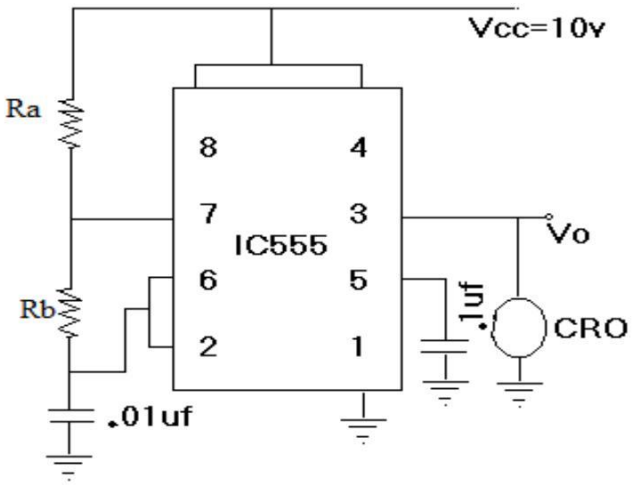

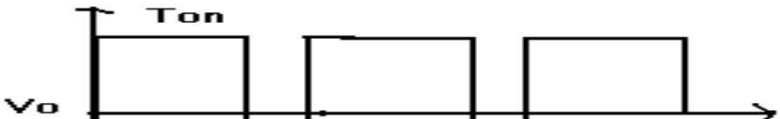

RESULT:

Thus the astable multivibrator circuit using IC555 is constructed and verified its theoretical and practical time period.

Post Lab Questions:

1. List the basic blocks of IC 555 timer?

- A relaxation oscillator.
- R-S flip-flop
- Two comparators
- Discharge transistors.

2. Give the applications of 555-timer Astable multivibrator.

a) Square wave generator
b) Voltage Controlled Oscillator (VCO)
c) FSK Generator
d) Schmitt trigger.

3. What is the advantage of 555 IC over op amp?

555 IC generates accurate time delay compared to op amp.

4. List the applications of monostable mode of 555 timer. .

a) Missing Pulse detector
b) Linear ramp generator
c) Frequency divider

DEPT. OF ELECTRICAL & ELECTRONICS ENGINEERING

SRM UNIVERSITY, Kattankulathur – 603203.

Title of Experiment :	
Name of the candidate :	
Register Number :	
Date of Experiment :	
Date of submission :	

S.No:	Marks split up	Maximum Marks (50)	Marks Obtained
1	Attendance	5	
2	Preparation of observation/record	10	
3	Pre viva questions	5	
4	Execution of experiment	15	
5	Calculation/evaluation of result	10	
6	Post viva questions	5	

12. Voltage Regulator

Pre Lab Questions:

1. **What is a voltage regulator?**

A voltage regulator is an electronic circuit that provides a stable DC voltage independent of the load current, temperature and AC line voltage variations.

2. **What is the main function of voltage regulator?**

The main function of a voltage regulator is to provide a stable DC voltage for processing other electronic circuits.

3. **What are the different types of voltage regulators?**

a) Fixed output voltage regulator (positive or negative)
b) Adjustable output voltage regulators (positive or negative)
c) Switching regulators.
d) Special regulators.

4. What are switching regulators?

Regulators which operate the transistor as a high frequency ON/OFF switch, so that the power transistor does not conduct current continuously is called switching regulator.

5. What are the four main parts of voltage regulators?

a) Reference voltage circuit
b) Error amplifier
c) Series pole transistor
d) Feedback Network.

12. VOLTAGE REGULATOR USING OP-AMP

AIM:

To design a high current, low voltage and high voltage linear variable dc regulated power supply and test its line and load regulation.

APPARATUS REQUIRED:

S.NO	APPARATUS	SPECIFICATION	QUANTITY
1.	Transistors	TIP122,2N3055	1 each
2.	Integrated Circuit	LM723	1
3.	Digital Ammeter	(0 – 10) A	1
4.	Digital Voltmeter	(0 – 20) V	1
5.	Variable Power Supply	(0 – 30) V-2A	1
6.	Resistors	300Ω ,430Ω ,1KΩ ,678KΩ ,67 8Ω 1Ω	1 each 2
7.	Capacitors	0.1µ F,100pF	1 each
8.	Rheostat	(0 – 350) Ω	1

THEORY:

A voltage regulator is an electrical regulator designed to automatically maintain a constant voltage level. A voltage regulator may be a simple "feed-forward" design or may include negative feedback control loops. It may use an electromechanical mechanism, or electronic components. Depending on the design, it may be used to regulate one or more AC or DC voltages. Load regulation is the change in output voltage for a given change in

load current. Line regulation or input regulation is the degree to which output voltage changes with input (supply) voltage changes - as a ratio of output to input change. Active regulators employ at least one active (amplifying) component such as a transistor or operational amplifier. linear regulator is a voltage regulator based on an active device (such as a bipolar junction transistor, field effect transistor or vacuum tube) operating in its "linear region"

PROCEDURE:

Line Regulation:

1. Give the circuit connection as per the circuit diagram

2Set the load Resistance to give load current of 0.25A

3Vary the input voltage from 7V to 18V and note down the corresponding output voltages

4Similarly set the load current (I_L) to 0.5A & 0.9A and make two more sets of measurements.

Load Regulation:

1 Set the input voltage to 10V.

2 Vary the load resistance in equal steps from 350Ω to 5Ω and note down the corresponding output voltage and load current.

3 Similarly set the input voltage (Vin) to 14V & 18V and make two more sets of measurements.

CIRCUIT DIAGRAM:

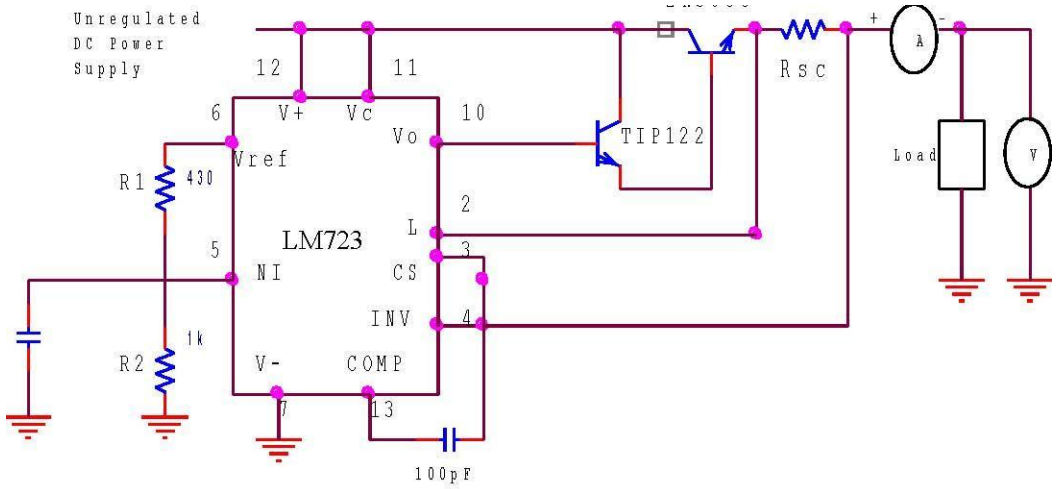

DESIGN:

<u>Vo=5V, Vref = 7.15 V</u>

To calculate R1, R2 ,R3 and Rsc.

Vo = Vref (R2 / (R1 + R2))

5 / 7.15 = (R2 / (R1 + R2))

(R1 + R2) 0.699= R2

0.699R1 = 0.301 R2 , R1 = 0.4306 R2

Select **R2 = 1 KΩ**

R1 = 1 KΩ * 0.4306 = 430Ω

<u>R1 = 430Ω</u>

R3 = R1 * R2 / (R1 + R2) , R3 = 430.6 *1000 /(430.6+1000)

R3 = 300Ω

Rsc = V_{sense} / I_{limit} = 0.5 /1A = 0.5Ω , **Rsc = 0.5Ω**

Load Regulation:

S.No:	I/P Voltage (V)	O/P Voltage (V)
1)	1	5
2)	2	5
3)	3	5
4)	4	4.7
5)	5	4.7
6)	6	4.6

Line Regulation:

S.No:	I/P Voltage	
	O/P Current (mA)	O/P Voltage (V)
1)	1	1.5
2)	2	2.3
3)	3	3.1
4)	4	4.4
5)	5	4.9
6)	6	5
7)	7	5
8)	8	5

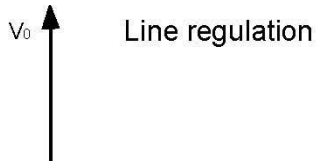

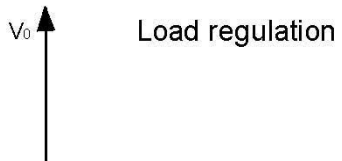

RESULT:

Thus the line and load regulation of low voltage linear variable dc regulated power supply was designed and tested.

Post Lab Questions:

1. What are the main advantages of voltage regulators?

a) Short circuit Protection.
b) Output Voltage can be varied.

2. **Define line regulation or source regulation.**

Line regulation is defined as the percentage change in the output voltage for a change in the input voltage. It is usually expressed in millivolts or as percentage of the input voltage.

3. Define Load regulation.

Load regulation is defined as the change in regulated output voltage for a change in load current. It is usually expressed in millivolts or as a percentage of V_0.

4. What are the limitations of 723 regulators?

a) No built in thermal protection.
b) It has no short circuit current limits.

5. What is current limiting ability?

Current limiting ability refers to the ability of the regulator to prevent the load current from increasing above a preset value.

1. **Question 1. Explain What Is An Operational Amplifier?**

Answer :

An operational amplifier, abbreviated as op-amp, is basically a multi-stage, very high gain, direct-coupled, negative feedback amplifier that uses voltage shunt feedback to provide a stabilized voltage gain.

2. **Question 2. State Assumptions Made For Analyzing Ideal Op-amp?**

Answer :

Assumptions made for analyzing ideal op-amp are:

- Infinite open-loop gain
- Infinite input impedance
- Zero output impedance
- Perfect balance
- Infinite frequency bandwidth
- Infinite slew rate
- Infinite common-mode rejection ratio
- Nil drift of characteristics with temperature

3. **Question 3. Explain What Are Differential Gain And Common-mode Gain Of A Differential Amplifier?**

Answer :

When the difference of the two inputs applied to the two terminals of a differential amplifier is amplified, the resultant gain is termed as differential gain. But when the two input terminals are connected to the same input source then the gain established by the differential amplifier is called the common mode gain.

4. **Question 4. Define Cmrr?**

Answer :

CMRR is defined as the ratio of differential voltage gain to common-mode voltage gain and it is given as CMRR = Ad/Acm.

5. **Question 5. Explain Why Does An Op-amp Have High Cmrr?**

Answer :

High CMRR ensures that the common mode signals such as noise are rejected successfully and the output voltage is proportional only to the differential input voltage.

6. **Question 6. Explain Why Open-loop Op-amp Configurations Are Not Used In Linear Applications?**

Answer :

When an op-amp is operated in the open-loop configuration, the output either goes to positive saturation or negative saturation levels or switches between positive and negative saturation levels and thus clips the output above these levels. So open-loop op-amp configurations are not used in linear applications.

7. **Question 7. List The Parameters That Should Be Considered For Ac And Dc Applications?**

Answer :

The parameters to be considered for dc applications are:

- Input offset voltage
- Input offset current
- Input bias current
- Drift

The parameters to be considered for ac applications are:

- Gain bandwidth product (GBW)
- Rise time
- Slew rate
- Full-power response
- AC noise

8. **Question 8. Define Offset Voltage As Applied To An Op-amp?**

Answer :

Input offset voltage may be defined as that voltage which is to be applied between the input terminals to balance the amplifier.

9. **Question 9. Define Slew Rate?**

Answer :

Slew rate of an op-amp is defined as the maximum rate of change of output voltage per unit time and is expresses in V/µs.

10. **Question 10. Explain What Is A Voltage Follower?**

Answer :

Voltage follower is an electronic circuits in which output voltage tracts the input voltage both in sign and magnitude.

11. **Question 11. Explain What Are The Advantages Of Using A Voltage Follower Amplifier?**

Answer :

Voltage follower has three unique characteristics viz. extremely high input impedance, extremely low output impedance and unity transmission gain and is , therefore, an ideal circuit device for use as a buffer amplifier.

12. **Question 12. In Explain What Way Is The Voltage Follower A Special Case Of The Non-inverting Amplifier?**

Answer :

If feedback resistor is made zero or R1 is made ∞(by keeping it open-circuited) in a noninverting amplifier circuit, voltage follower is obtained.

13. **Question 13. Explain What Is An Inverting Amplifier?**

Answer :

In an inverting amplifier, the input is connected to the minus or inverting terminal of op-amp.

14. **Question 14. Explain What Are The Applications Of An Inverting Amplifier?**

Answer :

Inverting amplifier is a very versatile component and can be used for performing number of mathematical stimulation such as analog inverter, paraphrase amplifier, phase shifter, adder, integrator, and differentiator.

15. **Question 15. Explain What Is A Differential Amplifier?**

Answer :

Differential amplifier is a combination of inverting and noninverting amplifiers and amplifies the voltage difference between input lines neither of which is grounded.

16. **Question 16. Give Examples Of Linear Circuits?**

Answer :

Adder, subtractor, differentiator, integrator fall under the category of linear circuits.

17. **Question 17. Explain What Is An Adder Or Summing Amplifier?**

Answer :
Adder or summing amplifier is a circuit that provides an output voltage proportional to or equal to the algebraic sum of two or more input voltages multiplied by a constant gain factor.

18. **Question 18. Explain What Is An Integrator?**

Answer :
An integrator is a circuit that performs a mathematical operation called integration.

19. **Question 19. Explain What Are The Applications Of Integrator?**

Answer :
Integrators are widely used in ramp or sweep generators, filters, analog computers etc.

20. **Question 20. Op-amp Is Used Mostly As An Integrator Than A Differentiation. Explain Why?**

Answer :
Op-amp is used mostly as an integrator than a differentiator because in differentiator at high frequency, gain is high and so high-frequency noise is also amplified which absolutely abstract the differentiated signal.

21. **Question 21. What Is Characteristic Of Ideal Op Amp?**

Answer :
Characteristic of ideal OP AMP are

- Infinite voltage gain
- Zero output impedance
- Infinite input impedance
- Infinite slew rate
- Characteristics not drifting with temperature
- Infinite bandwidth

Question 22. What Is Amplifier?

Answer :
Amplifier is a device that makes sound louder and signal level greater.

Question 23. What Is The Formula For Non Inverting Amplifier?

Answer :
The formula for non inverting amplifier is given as 1+Rf/R1.

Question 24. What Is Perfect Balance In Op Amp?

Answer :
Perfect balance is the characteristics of ideal OP AMP and if there is same input applied then we will get the output zero. In this condition it is known as perfect balance.

Question 25. Which Opamp Don’t Have Feedback Loop?

Answer :
Comparator OP AMP (operational amplifier) don’t have feedback loop.

Question 26. Why Opamp Called Direct Coupled High Differential Circuit?

Answer :
OPAMP is called direct coupled because the input of one OPAMP is inserted into the input of another OPAMP. It is called high gain differential circuit because the difference of the two input is amplified.

Question 27. Why Opamp Called Operational Amplifier?

Answer :

OPAMP it is a direct coupled high gain differential input amplifier. It is called operational amplifier because it is used for performing different functions like differentiation, addition, integration, subtraction. It has infinite voltage gain, infinite slew rate, infinite input impedance, zero output impedance, infinite bandwidth.

Question 28. What Is The Output Differentiation And Integrator?

Answer :

If we give the sinusoidal input in differentiator we will get the output of differentiator as a square output. If we give the sinusoidal input in integrator we will get the output of integrator as a ramp output.

Question 29. For The Cmrr To Be Infinite What Will Be The Condition?

Answer :

CMRR is defined as the ratio of differential voltage gain (Ad) to common mode voltage gain (Acm).

The formula for CMRR is given below:

CMRR = Ad/Acm

If Acm will be zero then only it will be infinite.

Question 30. Explain What Is Meant By Small Signal Amplifier?

Answer :

When the input signal is quite weak and produces less small fluctuations in the output current in comparison to its quiescent value, the amplifier is called the small signal or voltage amplifier.

Question 31. Explain What Is Meant By Phase Reversal?

Answer :

In a CE configuration, the output voltage increases in the negative direction when the input signal voltage increases in the positive direction and vice-versa. This is called the phase reversal and and causes a phase difference of 180o between the input signal and output voltage.

Question 32. Explain What Is An Ac Emitter Resistance?

Answer :

The dynamic resistance of the emitter-base junction diode is called the ac emitter resistance.

Question 33. Explain What Do You Mean By Operating Point?

Answer :

The zero signal values of IC and VCE are known as the operating point. It is called operating point because the variations of IC and VCE take place about this point when signal is applied. It is also known as the quiescent or Q-point.

Question 34. Explain What Is Transistor Biasing?

Answer :

The proper flow of zero signal collector current and the maintenance of proper collector emitter voltage during the passage of signal is called the transistor biasing.

Question 35. Explain What Is Faithful Amplification?

Answer :

The process of raising the strength of a weak signal without any change in its general shape is referred to as faithful amplification.

Question 36. Explain What Is The Effect Of Removal Of Bypass Capacitor In A Ce Amplifier Circuit?

Answer :

Removal of bypass capacitor in a CE amplifier circuit causes excessive degeneration in the amplifier circuit and therefore reduction in voltage gain.

Question 37. Explain Why Common-collector Circuit Is Known As An Emitter Follower?

Answer :

The CC circuit amplifier is called an emitter follower because in this circuit the output voltage at the emitter terminal follows the input signal applied to the base terminal.

Question 38. Explain What Are The Main Purposes For Which A Common-collector Amplifier May Be Used?

Answer :

For a common collector amplifier, current gain is as high as for CE amplifier, voltage gain is less than unity, input resistance is the highest and the output resistance is the lowest of all the three (CE, ,CC and CB) configurations. This circuit finds wide applications as a buffer amplifier between a high impedance source and a low load.

Amplifier is the generic term used to describe a circuit which produces and increased version of its input signal. However, not all amplifier circuits are the same as they are classified according to their circuit configurations and modes of operation.

In “Electronics”, small signal amplifiers are commonly used devices as they have the ability to amplify a relatively small input signal, for example from a *Sensor* such as a photo-device, into a much larger output signal to drive a relay, lamp or loudspeaker for example.

There are many forms of electronic circuits classed as amplifiers, from Operational Amplifiers and Small Signal Amplifiers up to Large Signal and Power Amplifiers. The classification of an amplifier depends upon the size of the signal, large or small, its physical configuration and how it processes the input signal, that is the relationship between input signal and current flowing in the load.

The type or classification of an Amplifier is given in the following table.

Classification of Signal Amplifier

Type of Signal	Type of Configuration	Classification	Frequency of Operation
Small Signal	Common Emitter	Class A Amplifier	Direct Current (DC)
Large Signal	Common Base	Class B Amplifier	Audio Frequencies (AF)
	Common Collector	Class AB Amplifier	Radio Frequencies (RF)
		Class C Amplifier	VHF, UHF and SHF Frequencies

Amplifiers can be thought of as a simple box or block containing the amplifying device, such as a Bipolar Transistor, Field Effect Transistor or Operational Amplifier, which has two input terminals and two output terminals (ground being common) with the output signal being much greater than that of the input signal as it has been “Amplified”.

An ideal signal amplifier will have three main properties: Input Resistance or (R_{IN}), Output Resistance or (R_{OUT}) and of course amplification known commonly as Gain or (A). No matter how complicated an amplifier circuit is, a general amplifier model can still be used to show the relationship of these three properties.

Ideal Amplifier Model

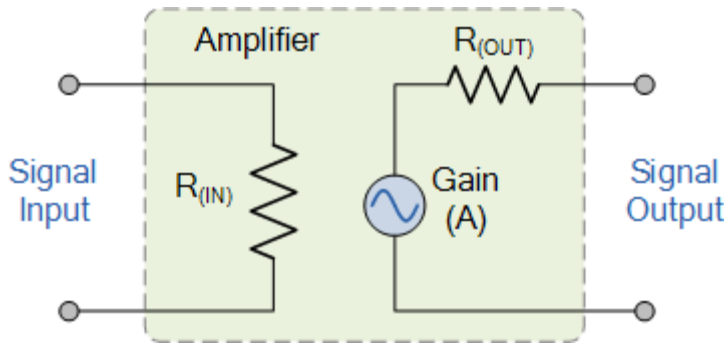

The amplified difference between the input and output signals is known as the Gain of the amplifier. Gain is basically a measure of how much an amplifier “amplifies” the input signal. For example, if we have an input signal of 1 volt and an output of 50 volts, then the gain of the amplifier would be “50”. In other words, the input signal has been increased by a factor of 50. This increase is called **Gain**.

Amplifier gain is simply the ratio of the output divided-by the input. Gain has no units as its a ratio, but in Electronics it is commonly given the symbol “A”, for Amplification. Then the gain of an amplifier is simply calculated as the “output signal divided by the input signal”.

Amplifier Gain

The introduction to the amplifier gain can be said to be the relationship that exists between the signal measured at the output with the signal measured at the input. There are three different kinds of amplifier gain which can be measured and these are: *Voltage Gain* (Av), *Current Gain* (Ai) and *Power Gain*(Ap) depending upon the quantity being measured with examples of these different types of gains are given below.

Amplifier Gain of the Input Signal

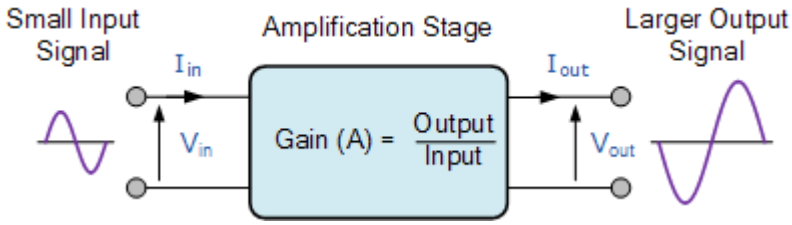

Voltage Amplifier Gain

$$Voltage\,Gain\,(A_v) = \frac{Output\ Voltage}{Input\ Voltage} = \frac{Vout}{Vin}$$

Current Amplifier Gain

$$Current\,Gain\,(A_i) = \frac{Output\ Current}{Input\ Current} = \frac{Iout}{Iin}$$

Power Amplifier Gain

$$Power\,Gain\,(A_p) = A_v\ x\ A_i$$

Note that for the Power Gain you can also divide the power obtained at the output with the power obtained at the input. Also when calculating the gain of an amplifier, the subscripts v, i and p are used to denote the type of signal gain being used.

The power gain (Ap) or power level of the amplifier can also be expressed in **Decibels**, (**dB**). The Bel (B) is a logarithmic unit (base 10) of measurement that has no units. Since the Bel is too large a unit of measure, it is prefixed with *deci* making it **Decibels** instead with one decibel being one tenth (1/10th) of a Bel. To calculate the gain of the amplifier in Decibels or dB, we can use the following expressions.

- Voltage Gain in dB: a_v = 20*log(Av)
- Current Gain in dB: a_i = 20*log(Ai)
- Power Gain in dB: a_p = 10*log(Ap)

Note that the DC power gain of an amplifier is equal to ten times the common log of the output to input ratio, where as voltage and current gains are 20 times the common log of the ratio. Note however, that 20dB is not twice as much power as 10dB because of the log scale.

Also, a positive value of dB represents a **Gain** and a negative value of dB represents a **Loss** within the amplifier. For example, an amplifier gain of +3dB indicates that the amplifiers output signal has “doubled”, (x2) while an amplifier gain of -3dB indicates that the signal has “halved”, (x0.5) or in other words a loss.

The -3dB point of an amplifier is called the **half-power point** which is -3dB down from maximum, taking 0dB as the maximum output value.

Amplifier Example No1

Determine the Voltage, Current and Power Gain of an amplifier that has an input signal of 1mA at 10mV and a corresponding output signal of 10mA at 1V. Also, express all three gains in decibels, (dB).

The Various Amplifier Gains:

$$A_v = \frac{\text{Output Voltage}}{\text{Input Voltage}} = \frac{1}{0.01} = 100$$

$$A_i = \frac{\text{Output Current}}{\text{Input Current}} = \frac{10}{1} = 10$$

$$A_p = A_v \times A_i = 100 \times 10 = 1{,}000$$

Amplifier Gains given in Decibels (dB):

$$a_v = 20 \log A_v = 20 \log 100 = 40\,\text{dB}$$

$$a_i = 20 \log A_i = 20 \log 10 = 20\,\text{dB}$$

$$a_p = 10 \log A_p = 10 \log 1000 = 30\,\text{dB}$$

Then the amplifier has a Voltage Gain, (Av) of 100, a Current Gain, (Ai) of 10 and a Power Gain, (Ap) of 1,000

Generally, amplifiers can be sub-divided into two distinct types depending upon their power or voltage gain. One type is called the **Small Signal Amplifier** which include pre-amplifiers, instrumentation amplifiers etc. Small signal amplifies are designed to amplify very small signal voltage levels of only a few micro-volts (μV) from sensors or audio signals.

The other type are called **Large Signal Amplifiers** such as audio power amplifiers or power switching amplifiers. Large signal amplifiers are designed to amplify large input voltage signals or switch heavy load currents as you would find driving loudspeakers.

Power Amplifiers

The **Small Signal Amplifier** is generally referred to as a “Voltage” amplifier because they usually convert a small input voltage into a much larger output voltage. Sometimes an amplifier circuit is required to drive a motor or feed a loudspeaker and for these types of applications where high switching currents are needed **Power Amplifiers** are required.

As their name suggests, the main job of a “Power Amplifier” (also known as a large signal amplifier), is to deliver power to the load, and as we know from above, is the product of the voltage and current applied to the load with the output signal power being greater than the input signal power. In other words, a power amplifier amplifies the power of the input signal which is why these types of amplifier circuits are used in audio amplifier output stages to drive loudspeakers.

The power amplifier works on the basic principle of converting the DC power drawn from the power supply into an AC voltage signal delivered to the load. Although the amplification is high the efficiency of the conversion from the DC power supply input to the AC voltage signal output is usually poor.

The perfect or ideal amplifier would give us an efficiency rating of 100% or at least the power “IN” would be equal to the power “OUT”. However, in reality this can never happen as some of the power is lost in the form of heat and also, the amplifier itself consumes power during the amplification process. Then the efficiency of an amplifier is given as:

Amplifier Efficiency

$$Efficiency\ (\eta) = \frac{power\ delivered\ to\ the\ load}{d.c.\ power\ taken\ from\ the\ supply} = \frac{Pout}{Pin}$$

Ideal Amplifier

We can know specify the characteristics for an ideal amplifier from our discussion above with regards to its **Gain**, meaning voltage gain:

- The amplifiers gain, (A) should remain constant for varying values of input signal.
- Gain is not be affected by frequency. Signals of all frequencies must be amplified by exactly the same amount.

- The amplifiers gain must not add noise to the output signal. It should remove any noise that is already exists in the input signal.
- The amplifiers gain should not be affected by changes in temperature giving good temperature stability.
- The gain of the amplifier must remain stable over long periods of time.

Electronic Amplifier Classes

The classification of an amplifier as either a voltage or a power amplifier is made by comparing the characteristics of the input and output signals by measuring the amount of time in relation to the input signal that the current flows in the output circuit.

We saw in the *Common Emitter Transistor* tutorial that for the transistor to operate within its "Active Region" some form of "Base Biasing" was required. This small Base Bias voltage added to the input signal allowed the transistor to reproduce the full input waveform at its output with no loss of signal.

However, by altering the position of this Base bias voltage, it is possible to operate an amplifier in an amplification mode other than that for full waveform reproduction. With the introduction to the amplifier of a Base bias voltage, different operating ranges and modes of operation can be obtained which are categorized according to their classification. These various mode of operation are better known as **Amplifier Class**.

Audio power amplifiers are classified in an alphabetical order according to their circuit configurations and mode of operation. Amplifiers are designated by different classes of operation such as class "A", class "B", class "C", class "AB", etc. These different amplifier classes range from a near linear output but with low efficiency to a non-linear output but with a high efficiency.

No one class of operation is "better" or "worse" than any other class with the type of operation being determined by the use of the amplifying circuit. There are typical maximum conversion efficiencies for the various types or class of amplifier, with the most commonly used being:

- Class A Amplifier – has low efficiency of less than 40% but good signal reproduction and linearity.
- Class B Amplifier – is twice as efficient as class A amplifiers with a maximum theoretical efficiency of about 70% because the amplifying device only conducts (and uses power) for half of the input signal.
- Class AB Amplifier – has an efficiency rating between that of Class A and Class B but poorer signal reproduction than Class A amplifiers.

- Class C Amplifier – is the most efficient amplifier class but distortion is very high as only a small portion of the input signal is amplified therefore the output signal bears very little resemblance to the input signal. Class C amplifiers have the worst signal reproduction.

Class A Amplifier Operation

Class A Amplifier operation is where the entire input signal waveform is faithfully reproduced at the amplifiers output as the transistor is perfectly biased within its active region, thereby never reaching either of its cut-off or saturation regions. This then results in the AC input signal being perfectly "centred" between the amplifiers upper and lower signal limits as shown below.

Class A Amplifier Output Waveform

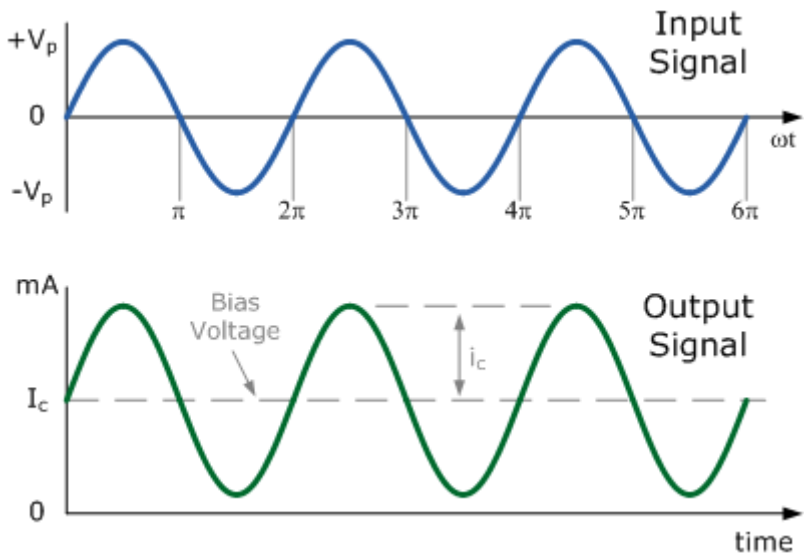

In this configuration, the Class A amplifier uses the same transistor for both halves of the output waveform and due to its biasing arrangement the output transistor always has current flowing through it, even if there is no input signal. In other words the output transistors never turns "OFF". This results in the Class A type of operation being very inefficient as its conversion of the DC supply power to the AC signal power delivered to the load is usually very low.

Generally, the output transistor of a Class A amplifier gets very hot even when there is no input signal present so some form of heat sinking is required. The direct current flowing through the output transistor (Ic) when there is no output signal will be equal to the current flowing through the load. Then a Class A amplifier is very inefficient as most of the DC power is converted to heat.

Class B Amplifier Operation

Unlike the Class A amplifier mode of operation above that uses a single transistor for its output power stage, the **Class B Amplifier** uses two complimentary transistors (either an NPN and a PNP or a NMOS and a PMOS) for each half of the output waveform. One transistor conducts for one-half of the signal waveform while the other conducts for the other or opposite half of the signal waveform. This means that each transistor spends half of its time in the active region and half its time in the cut-off region thereby amplifying only 50% of the input signal.

Class B operation has no direct DC bias voltage like the class A amplifier, but instead the transistor only conducts when the input signal is greater than the base-emitter voltage and for silicon devices is about 0.7v. Therefore, at zero input there is zero output. This then results in only half the input signal being presented at the amplifiers output giving a greater amount of amplifier efficiency as shown below.

Class B Amplifier Output Waveform

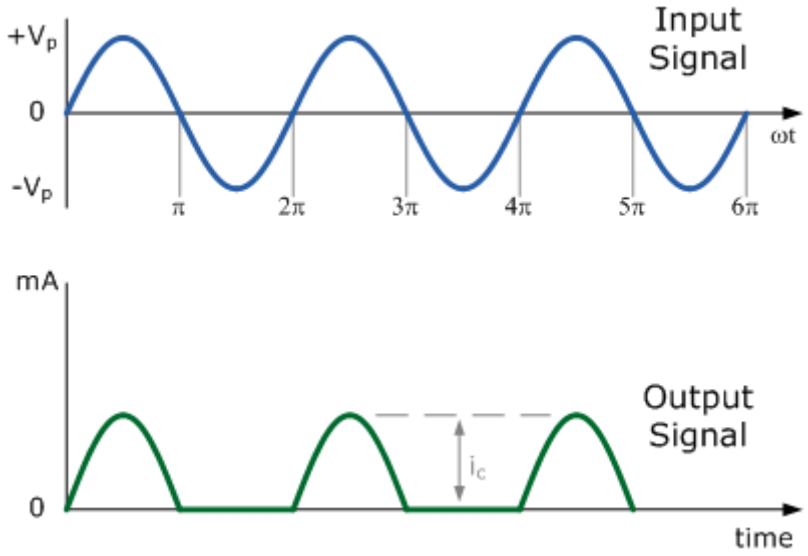

In a Class B amplifier, no DC voltage is used to bias the transistors, so for the output transistors to start to conduct each half of the waveform, both positive and negative, they need the base-emitter voltage Vbe to be greater than the 0.7v required for a bipolar transistor to start conducting.

Then the lower part of the output waveform which is below this 0.7v window will not be reproduced accurately resulting in a distorted area of the output waveform as one transistor turns “OFF” waiting for the other to turn back “ON”. The result is that there is a small part of the output waveform at the zero

voltage cross over point which will be distorted. This type of distortion is called **Crossover Distortion** and is looked at later on in this section.

Class AB Amplifier Operation

The **Class AB Amplifier** is a compromise between the Class A and the Class B configurations above. While Class AB operation still uses two complementary transistors in its output stage a very small biasing voltage is applied to the Base of the transistor to bias it close to the Cut-off region when no input signal is present.

An input signal will cause the transistor to operate as normal in its Active region thereby eliminating any crossover distortion which is present in class B configurations. A small Collector current will flow when there is no input signal but it is much less than that for the Class A amplifier configuration.

This means then that the transistor will be “ON” for more than half a cycle of the waveform. This type of amplifier configuration improves both the efficiency and linearity of the amplifier circuit compared to a pure Class A configuration.

Class AB Amplifier Output Waveform

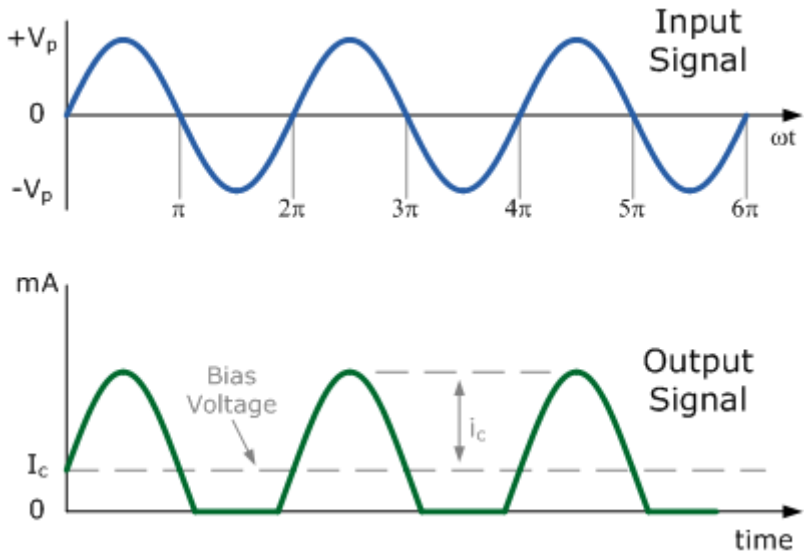

The class of operation for an amplifier is very important and is based on the amount of transistor bias required for operation as well as the amplitude required for the input signal. Amplifier classification takes into account the portion of the input signal in which the transistor conducts as well as determining both the efficiency and the amount of power that the switching transistor both consumes and dissipates in the form of wasted heat. Then we

can make a comparison between the most common types of amplifier classifications in the following table.

Power Amplifier Classes

Class	A	B	C	AB
Conduction Angle	360°	180°	Less than 90°	180 to 360°
Position of the Q-point	Centre Point of the Load Line	Exactly on the X-axis	Below the X-axis	In between the X-axis and the Centre Load Line
Overall Efficiency	Poor 25 to 30%	Better 70 to 80%	Higher than 80%	Better than A but less than B 50 to 70%
Signal Distortion	None if Correctly Biased	At the X-axis Crossover Point	Large Amounts	Small Amounts

Badly designed amplifiers especially the Class “A” types may also require larger power transistors, more expensive heat sinks, cooling fans, or even an increase in the size of the power supply required to deliver the extra wasted power required by the amplifier. Power converted into heat from transistors, resistors or any other component for that matter, makes any electronic circuit inefficient and will result in the premature failure of the device.

So why use a Class A amplifier if its efficiency is less than 40% compared to a Class B amplifier that has a higher efficiency rating of over 70%. Basically, a Class A amplifier gives a much more linear output meaning that it has, **Linearity** over a larger frequency response even if it does consume large amounts of DC power.

In this **Introduction to the Amplifier** tutorial, we have seen that there are different types of amplifier circuit each with its own advantages and disadvantages. In the next tutorial about amplifiers, we will look at the most commonly connected type of transistor amplifier circuit, the common emitter amplifier. Most transistor amplifiers are of the Common Emitter or CE type circuit due to their large gains in voltage, current and power as well as their excellent input/output characteristics.